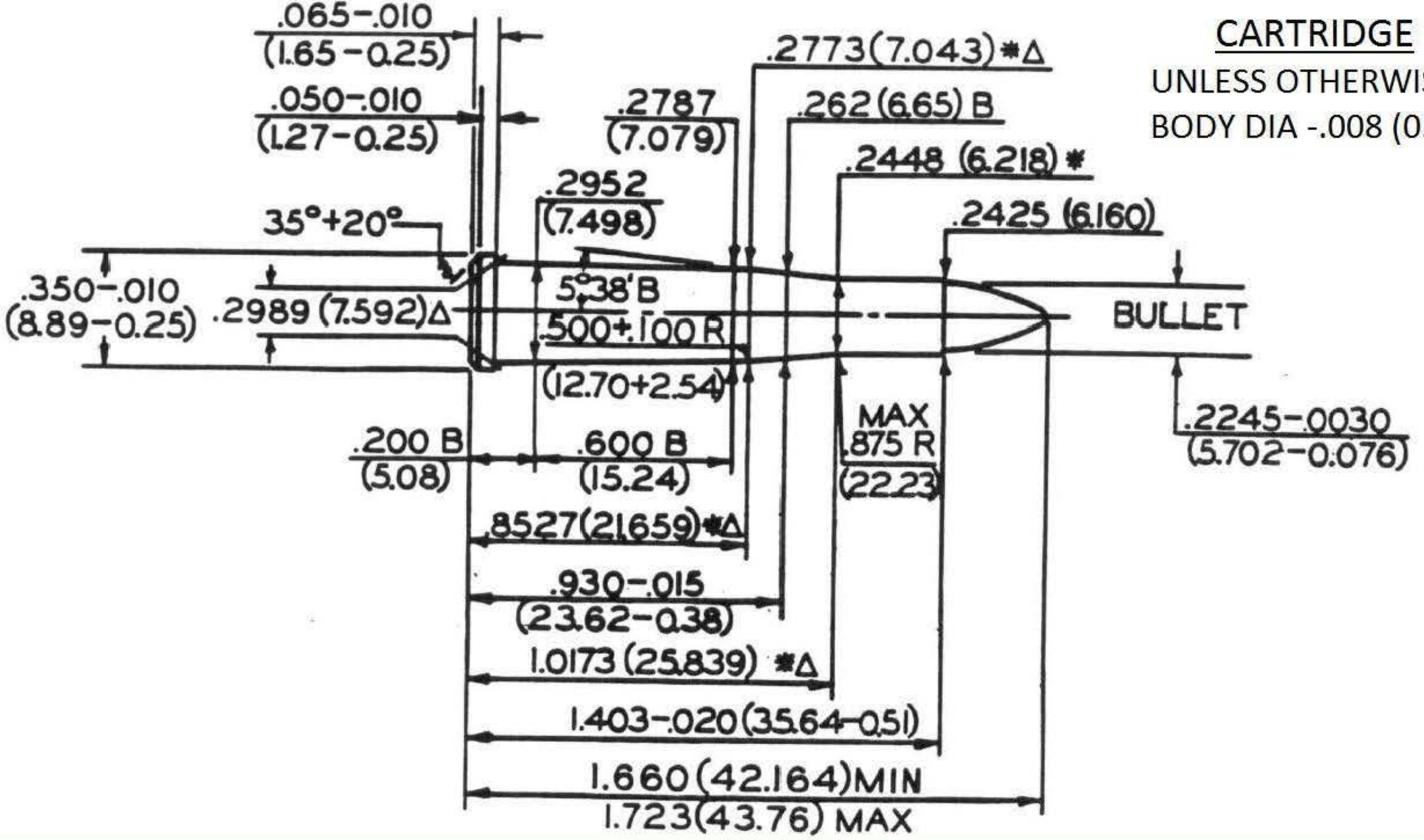

CARTRIDGE

UNLESS OTHERWISE NOTED
BODY DIA -.008 (0.20)

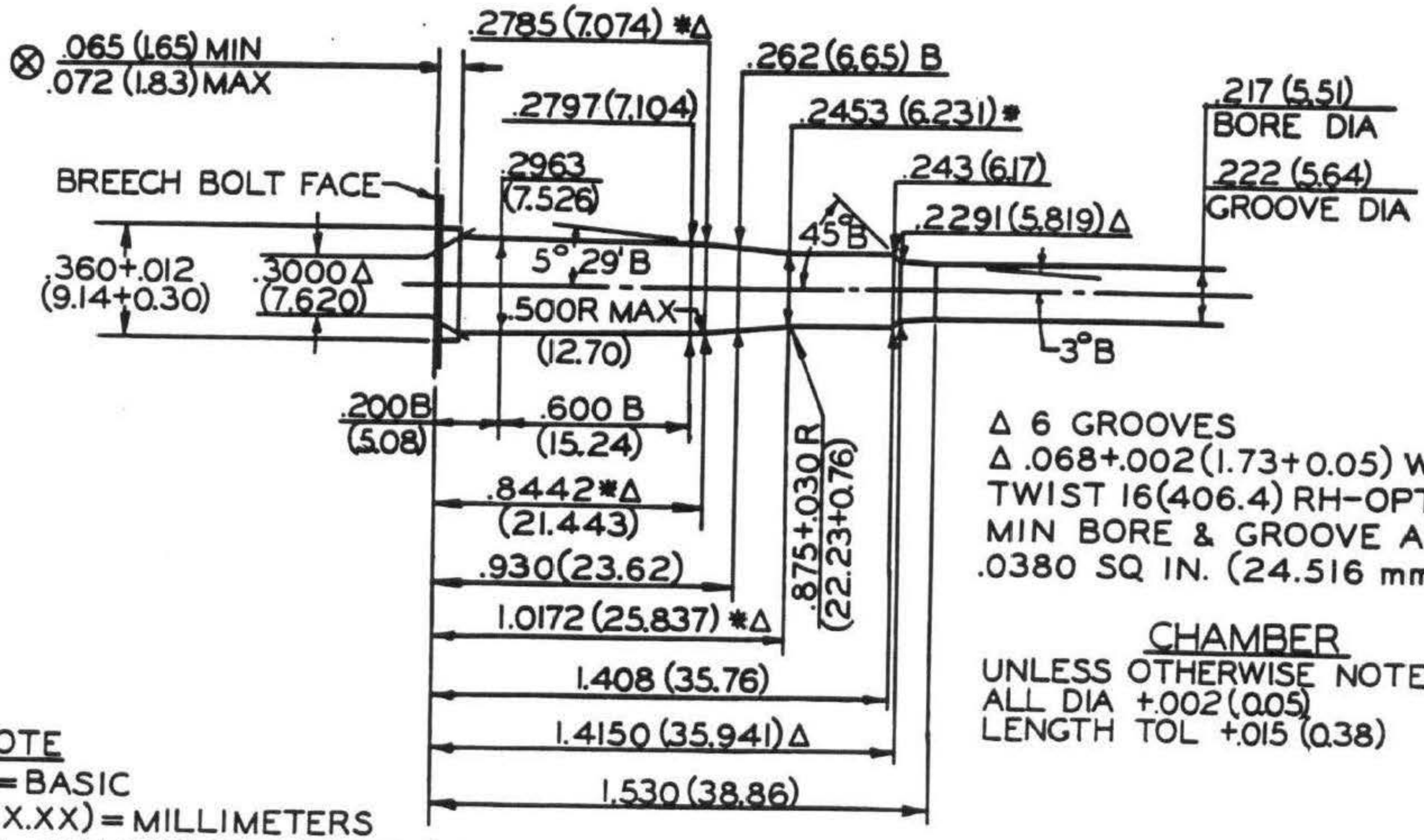

Δ 6 GROOVES
Δ .068+.002(1.73+0.05) WIDE
TWIST 16(406.4) RH-OPTIONAL
MIN BORE & GROOVE AREA
.0380 SQ IN. (24.516 mm2)

CHAMBER

UNLESS OTHERWISE NOTED
ALL DIA +.002(0.05)
LENGTH TOL +.015 (0.38)

NOTE
B=BASIC
(XX.XX)=MILLIMETERS
⊗=HEADSPACE DIMENSION
* DIMENSIONS ARE TO INTERSECTION OF LINES
Δ=REFERENCE DIMENSION
ALL CALCULATIONS APPLY AT MAXIMUM MATERIAL CONDITION (MMC)

22 HORNET

DO NOT SCALE THIS DRAWING

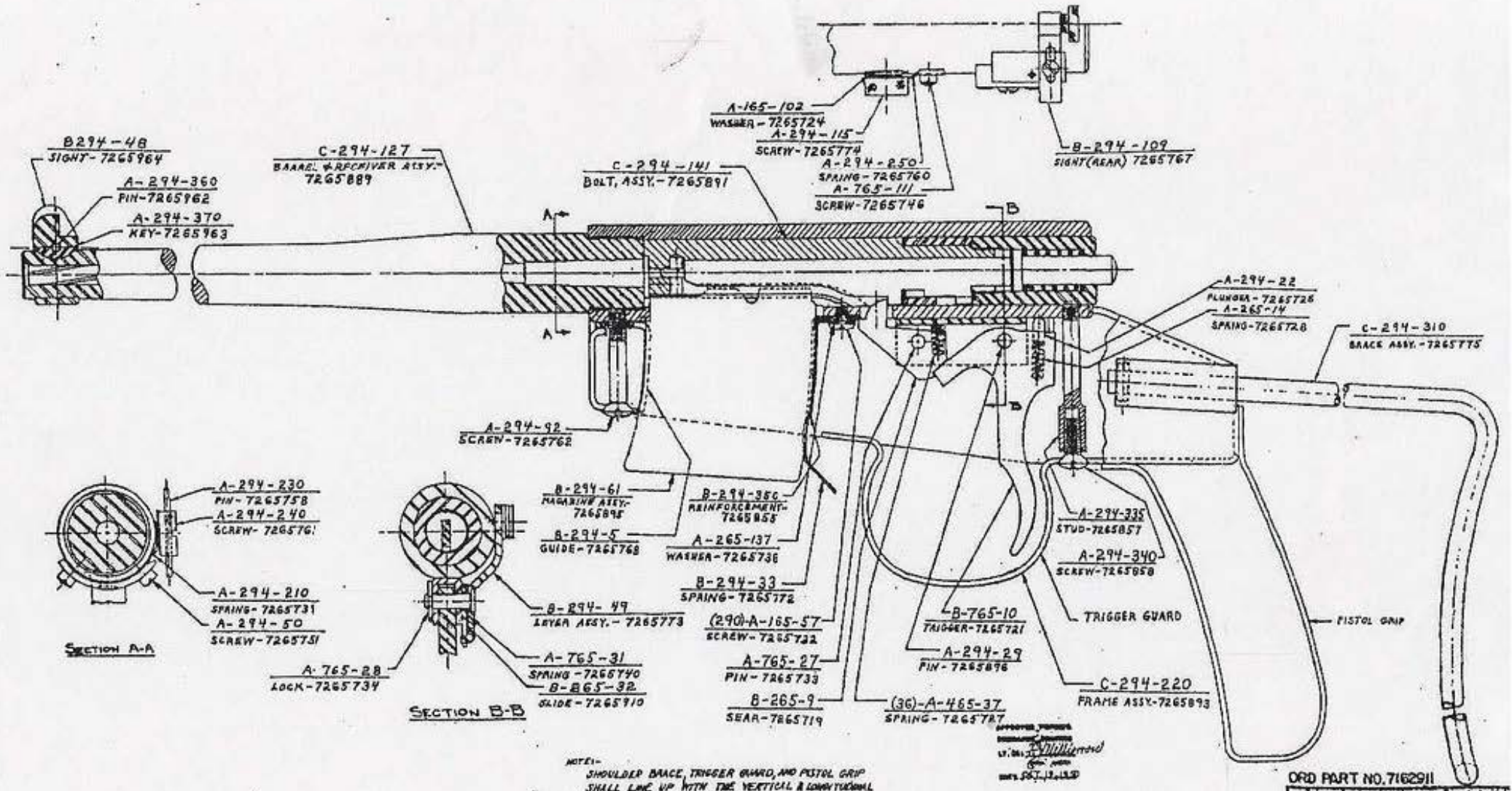

NOTE:-
SHOULDER BRACE, TRIGGER GUARD, AND PISTOL GRIP SHALL LINE UP WITH THE VERTICAL & LONGITUDINAL AXIS WITHIN 2° OF ANGLE.

ORD PART NO. 7162911

RIFLE

RIFLE, SURVIVAL, CAL. .22, M4 (WARNET CARTR

D-294-14

1

DO NOT SCALE THIS DRAWING

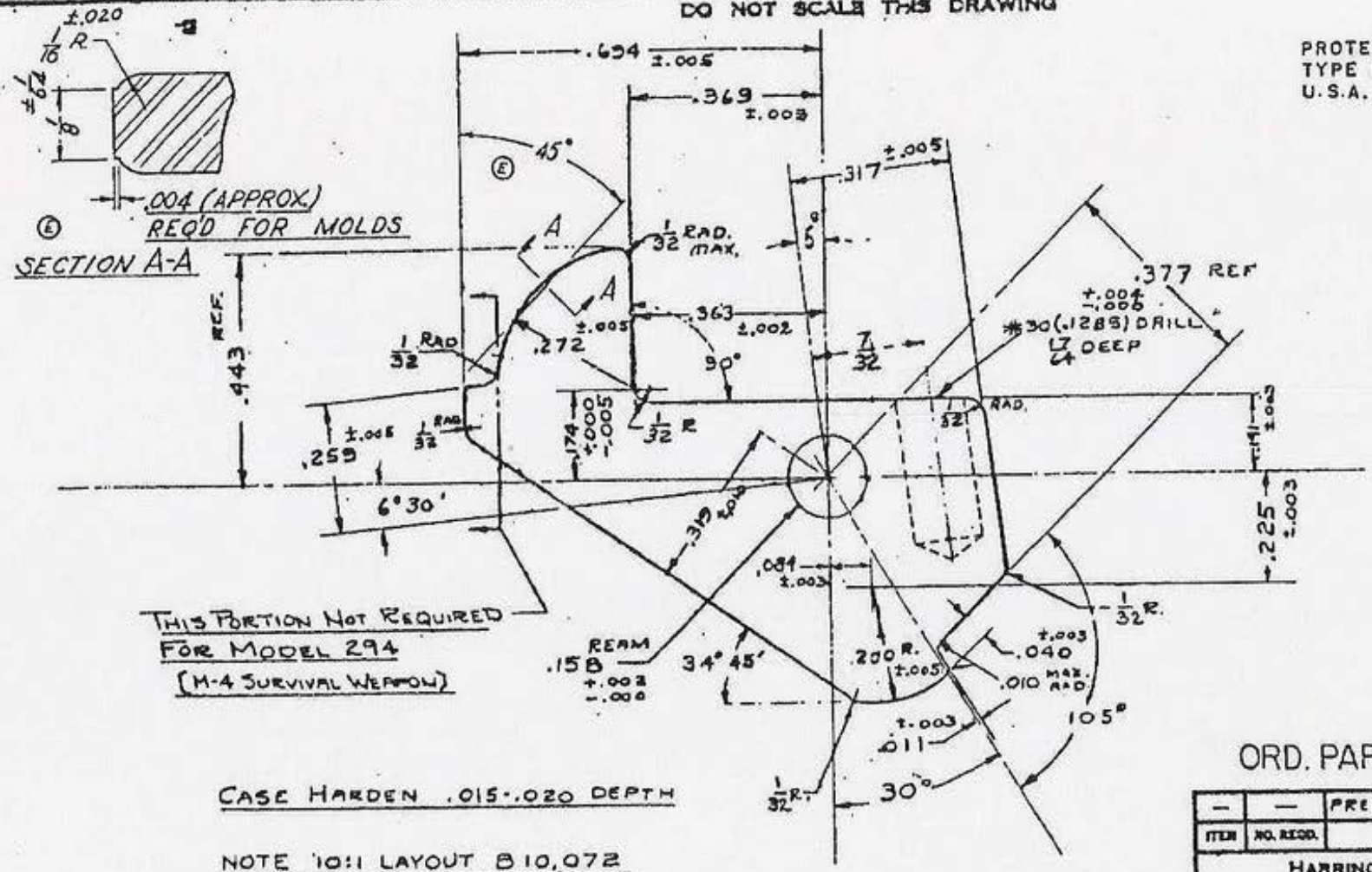

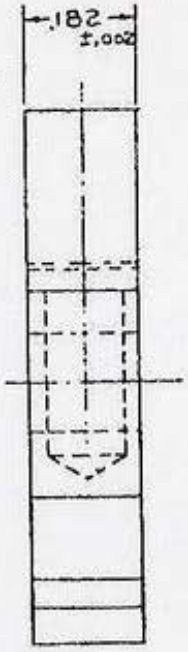

PROTECTIVE FINISH
TYPE II CLASS A
U.S.A. 57-0-2

ORD. PART NO. 7265719

CASE HARDEN .015-.020 DEPTH

NOTE 10:1 LAYOUT B 10,072

ALL CORNERS & EDGES SHALL BE FREE FROM BURRS BUT SHALL NOT BE ROUNDED BEYOND .01R UNLESS OTHERWISE SPECIFIED.

APPROVED PENDING ORDNANCE DRAWING
COL. A. L. Feldmann
ORD. DEPT.
DATE MAY 10, 1951.

SUPERSEDES B-265-9 W/C 5-10-51.

F			
E	SEC. A-A & 45° ADDED	S.A.	9-4-51
D	ADDED, NOTE. SUPERSEDES	S.A.	5-10-51
	REVISIONS	BY	DATE

FRACTIONAL DIMENSIONS ±.005 UNLESS SPECIFIED OTHERWISE

ITEM	NO. REQD.	MATERIAL	DENSITY 6.6-6.6 GRAMS PER CC
—	—	PRES-MET POWDERED MTL	

HARRINGTON & RICHARDSON ARMS CO.
WORCESTER, MASS.

SEAR
REISING .22 CAL BOLT ACTION RIFLE
MODEL 265-365

PART & NO. SEAR #9		SCALE 5:1	OPER. NO.
DESIGNED BY	DATE	DRAWING NO.	
DETAILED BY J.F.P.	DATE 3-20-1951	B-265-9	
TRACED BY	DATE		
CHECKED BY A.S.B.	DATE 3-23-51		
APPVD. BY	DATE	SHEET 1 OF 1 SHEETS	

3

DO NOT SCALE THIS DRAWING

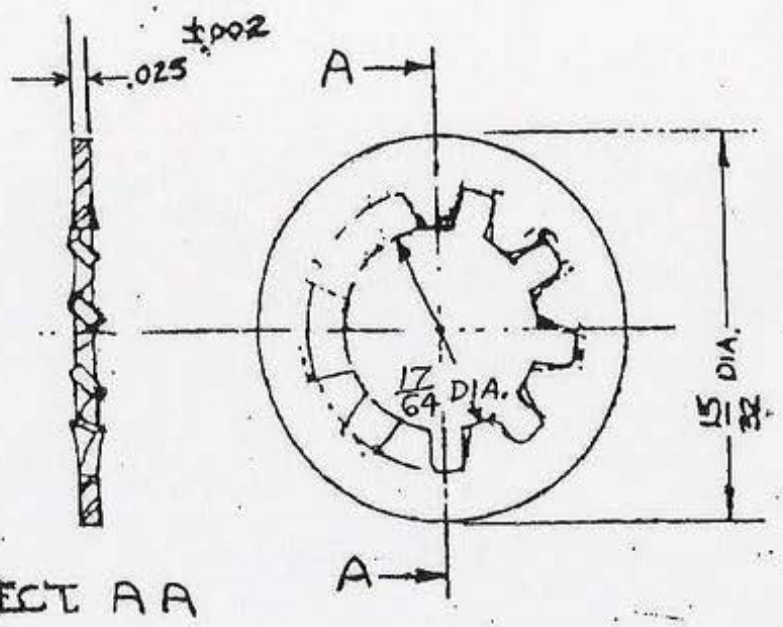

PROTECTIVE FINISH
TYPE II CLASS A
U.S.A. 57-0-2

MAY BE PURCHASED
HARDENED & PHOSPHATE
COATED UNDER
PART NO. 138167
DRG. BEAXI

APPROVED PENDING
ORDNANCE DRAWING
LT. COL. F. Mitchell
ORD. DEPT.
DATE MAY 24, 1950

SAME AS ORD. STD. BEAXI
PART NO. 138167

SHAKEPROOF # 1214

COMMERCIAL

ORD PART NO. 7265724

PARKERIZED BY H.&R. ARMS CO.

NO HEAT TREATMENT REQUIRED

ITEM	NO. REQ.	MATERIAL	SIZE
102	1	SP'G STEEL	STD. LOCK WASHER

HARRINGTON & RICHARDSON ARMS CO.
WORCESTER, MASS.

NAME REISING .22 CAL. LONG RIFLE
MOD 165 TAKE DOWN SCR RETAINING WASHER

PART & NO. TAKE DOWN SCR RETAINING WASHER | SCALE 4/1 | OPER. NO.

DRAWN BY | DATE
DETAILED BY | DATE
TRACED BY | DATE
CHECKED BY | DATE

DRAWG. NO. A165-102

SHEET 1 OF 1 SHEETS

REVISIONS	BY	DATE
D		
C		
B' CLASSIFICATION CANCELLED BY AUTHORITY OF OCD	S.A.	15 SEP 54
B NOTE & PROT. FIN. ADDED. NOTES: PARKERIZED & NO H.T. REMOVED	S.A.	18-8-52
A		

FRACTIONAL DIMENSIONS ±.005 DECIMAL DIMENSIONS ±

17

A-465-37

DO NOT SCALE THIS DRAWING

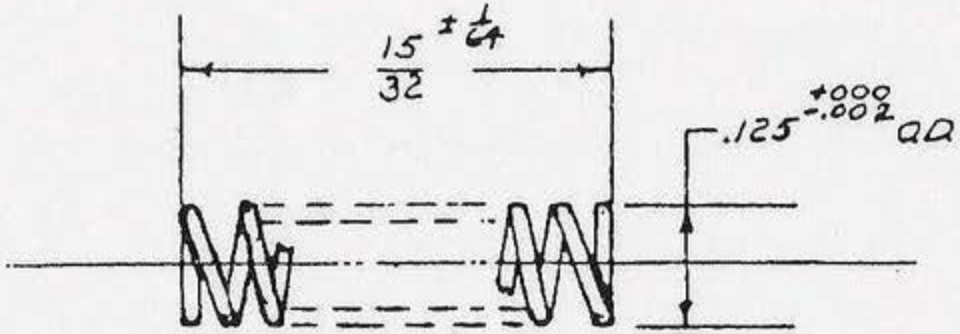

.022 MUSIC WIRE

9 COILS

BOTH ENDS CLOSED & GROUND

APPROVED PENDING
ORDNANCE DRAWING
LT. COL. F. Hollowell
ORD. DEPT.
DATE MAY 24, 1950

SET BEFORE TEMPERING

SPRING TEMPER

ORD PART NO. 7265727

ITEM	NO. REQ'D.	MATERIAL	SIZE
37	1	MUSIC WIRE	.022 DIA.

HARRINGTON & RICHARDSON ARMS CO.
WORCESTER, MASS.

MODEL #465 - REISING - 22 CAL. BOLT ACT. RIFLE

EXTRACTOR SPRING

MODEL #465

PART & NO. EXTR. SPRING #37 | SCALE 5/1 | OPER. NO. ~

	REVISIONS	BY	DATE
C	NOTE REMOVED.	SA	10-13-50
B	NOTE ADDED	R.S.P.	9-9-49
A	NOTE ADDED	FRC	4-12-49

DESIGNED BY	DATE
DETAILED BY FRC	DATE 4-20-48
TRACED BY EGW	DATE
CHECKED BY TRHK	DATE 4-21-48
APPVD. BY	DATE

DRAWING NO. A-465-37

SHEET OF SHEETS

FRACTIONAL DIMENSIONS ± .005 UNLESS SPECIFIED OTHERWISE

ORDNANCE NO. 1074

A-265-165

DO NOT SCALE THIS DRAWING

DEC 6-1951

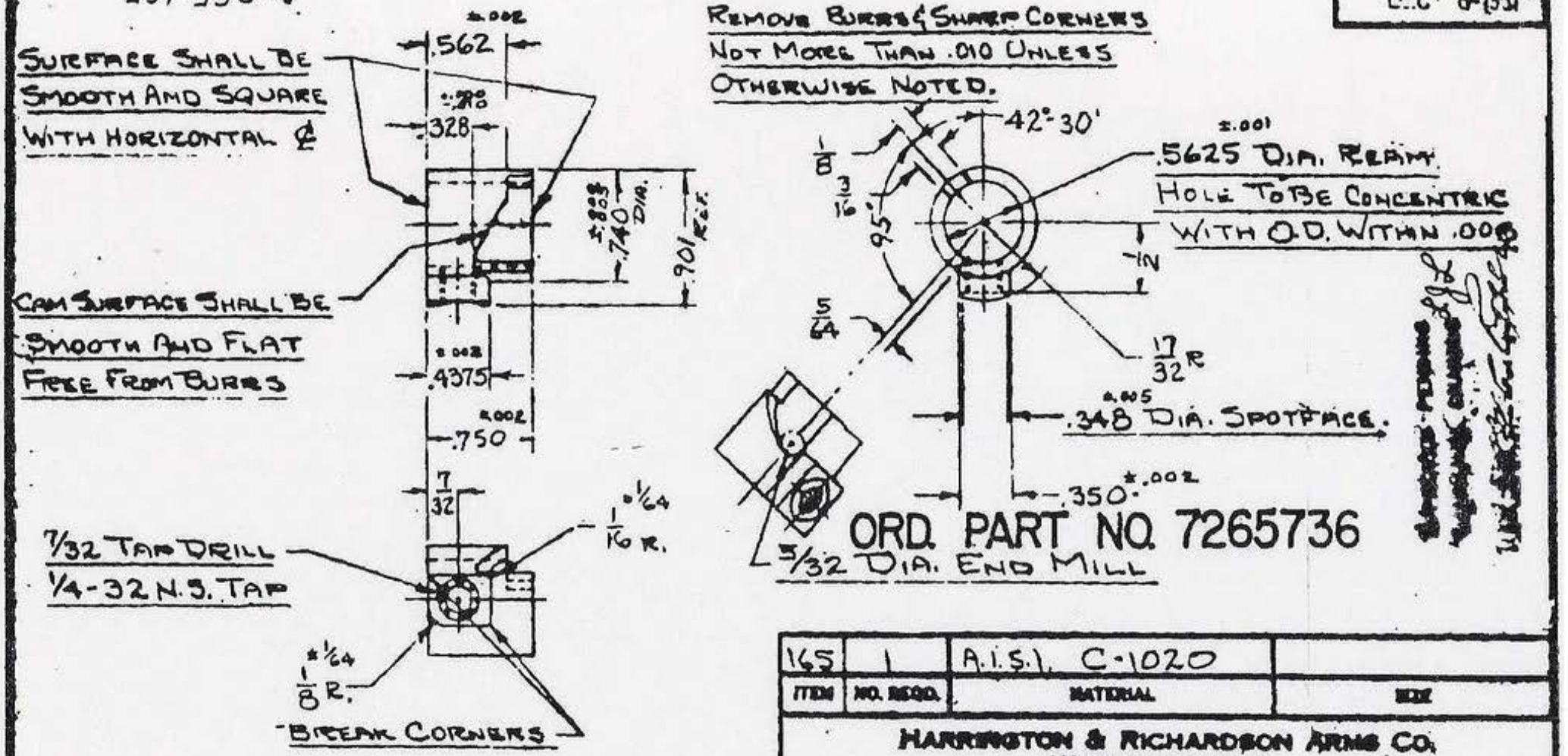

CYANIDE HARDEN AFTER ASSEMBLING WITH BALL HANDLE

PROTECTIVE FINISH TYPE II CLASS A AT ASSY 7265765

ITEM	NO. REQD.	MATERIAL	SIZE
165	1	A.I.S.I. C-1020	

HARRINGTON & RICHARDSON ARMS CO.
WORCESTER, MASS.

COCKING CAM
REBIMA .22 CAL. BOLT ACTION RIFLE
MODEL 265

H				PART D-NO. Cocking Cam #165	SCALE FULL
G				DRAWN BY	DATE
F	ADDED; SUPERSEDES OLD DWG. W/O. CHANGE	J.A.	1-7-52	DETAILED BY R.S.T.	DATE 4-2-51
	REVISIONS	BY	DATE	TRACED BY	DATE
				CHECKED BY	DATE 1/24/51
				APPROVED BY	DATE

DRAWING NO. A-265-165

FRACTIONAL DIMENSIONS ± .005 UNLESS SPECIFIED OTHERWISE

16

A-265-166

DO NOT SCALE THIS DRAWING

PROTECTIVE FINISH
TYPE II CLASS A
U.S.A. 57-0-2

ITEM	X DIM.	ORD. PART NO.
1	.025	7265899
2	.028	7265900
3	.031	7265901
4	.032	7265790
5	.034	7265791
6.	.036	7265792
7	.038	7265793
8	.041	7265902
9	.045	7265903
10	.051	7265904
11	.055	7265905
12	.060	7265906

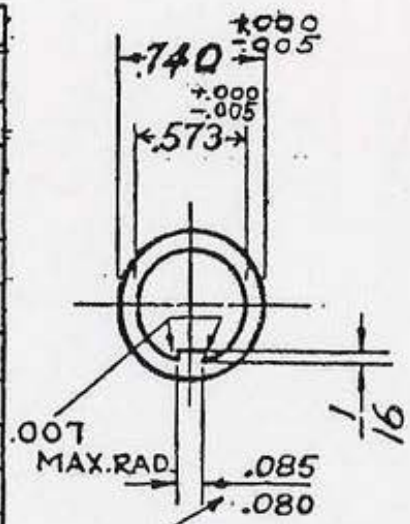

KEY SHALL BE CENTRAL WITH ℄ OF HOLE WITHIN ±.003

WASHERS SHALL BE FREE FROM BURRS AND DEFORMATIONS AND SHALL BE UNIFORMLY FLAT.

HOLE TO BE CONCENTRIC WITH O.D. WITHIN .008 INDICATOR READING.

APPROVED ~~PENDING~~
ORDNANCE ~~DRAWING~~
LT. COL. F. L. McMorrow
(ORD. CORP
DATE OCT. 19, 1950

SPRING STOCK 60-70 CARB.
HARDEN & TEMPER 45-47 ROCK "C"
GRIND TO THICKNESS

WASHER, BREECH SPACE
ORD. PART NO. 7265737

ITEM	NO. REQ.	MATERIAL AISI C1075	SIZE

HARRINGTON & RICHARDSON ARMS CO.
WORCESTER, MASS.

NAME REISING 22 CAL. BOLT-ACTION RIFLE
MOD. 265 RECOIL PLATE (REPEATER)

PART & NO. RECOIL PLATE A-265-166		SCALE FULL	OPER. NO.
DESIGN BY	DATE	DRAWG. NO. A-265-166	
DETAILED BY C. TYLK	DATE 1-16-45		
TRACED BY	DATE		
CHECKED BY C. TYLK	DATE 6-12-45		
APPD. BY	DATE	SHEET 1 OF 1 SHEETS	

F	CLASSIFICATION CANCELLED BY AUTHORITY OF OCM 33331	S.A.	5 SEP 54
E	±.001 ADDED, .007 MAX. RAD. ADDED.	S.A.	5-15-51
D	.740 +.000 -.005 WAS .740 +.000 -.005, MAT. A131-C1015 WAS SAE 1075	S.A.	1-30-51
C	.008 WAS .004, ±.003 WAS ±.002	S.A.	1-2-51
B	ADDED: PROTECTIVE FINISH, DRG. TITLE & NOTES	S.A.	10-13-50
A	ADDED ITEMS 5 TO 12 FOR MODEL #294	[illegible]	[illegible]
	REVISIONS	BY	DATE

FRACTIONAL DIMENSIONS ±.005 ~~DECIMAL DIMENSIONS ±~~

A-765-27

DO NOT SCALE THIS DRAWING

PROTECTIVE FINISH
TYPE II CLASS A
U.S.A. 57-0-2

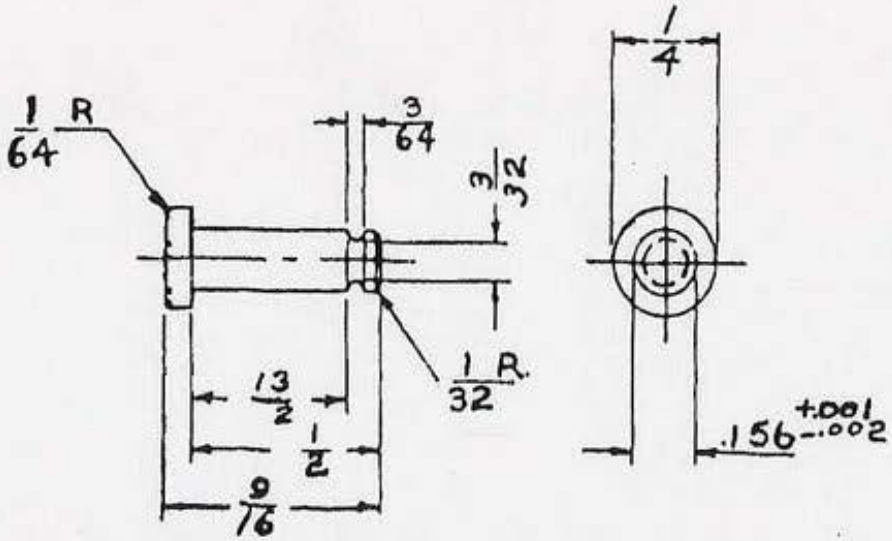

APPROVED PENDING
ORDNANCE DRAWING
LT. COL. F. J. McCullough
ORD. DEPT.
DATE: MAY 24, 1950

CYANIDE HARDEN

ORD PART NO. 7265733

ITEM	NO. REQ'D.	MATERIAL	SIZE
27	2	A.I.S.I. - C1018	

HARRINGTON & RICHARDSON ARMS CO.
WORCESTER, MASS.

SEAR PIN

MODEL 765

PART & NO. SEAR PIN #27 | SCALE 2/1 | OPER. NO.

DESIGNED BY | DATE
DETAILED BY P.J. | DATE 5-6-48
TRACED BY | DATE
CHECKED BY V.C.B. | DATE MAY 4,48
APPVD. BY | DATE

DRAWING NO. A-765-27

SHEET 18 OF SHEETS

	REVISIONS	BY	DATE
D	CLASSIFICATION CANCELLED BY AUTHORITY OF OCM 33331	S.A.	15 SEP 54
C	A.I.S.I. - C1018 WAS B1113, SEAR PIN WAS SEAR + TRIGGER PIN	S.A.	1-7-52
B	ADDED, PROTECTIVE FINISH	S.A.	10-18-50
A	+.001 -.002 WAS +.002 -.002		

FRACTIONAL DIMENSIONS ± .005 UNLESS SPECIFIED OTHERWISE

A- 765-28

DO NOT SCALE THIS DRAWING

PROTECTIVE FINISH
TYPE II CLASS A
U.S.A. 57-0-2

APPROVED PENDING
ORDNANCE PROVES
LT. OCR. [illegible]
ORD. CORP
DATE OCT. 19, 1950

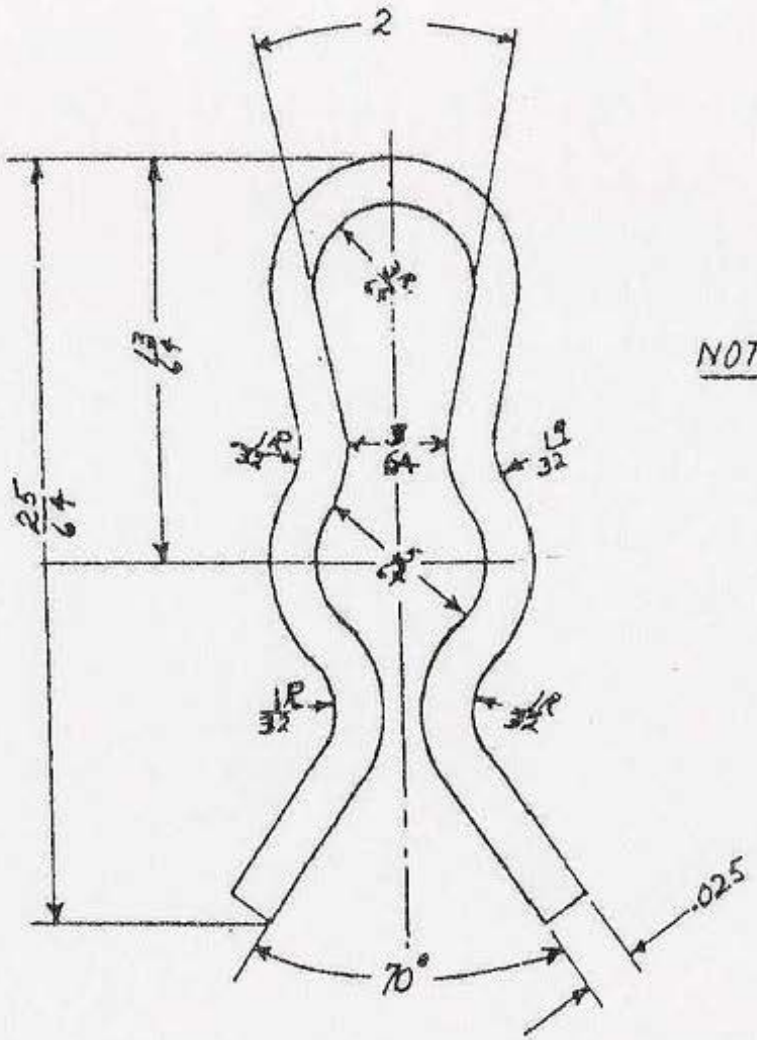

NOTE - BLEND ALL RADII

SPRING TEMPER

ORD. PART NO. 7265734

ITEM	NO. REQ'D.	MATERIAL	SIZE
	2	MUSIC WIRE	.025 DIA.

HARRINGTON & RICHARDSON ARMS CO.
WORCESTER, MASS.

SEAR & TRIGGER PIN LOCK

MODEL 765

PART & NO. SEAR & TRIG PIN LOCK		SCALE 10-1	OPER. NO.
DESIGNED BY	DATE	DRAWING NO.	
DETAILED BY [illegible]	DATE 5-28-48	A-765-28	
TRACED BY	DATE		
CHECKED BY [illegible]	DATE 5-25-48		
APPVD. BY	DATE	SHEET OF SHEETS	

C			
B1	CLASSIFICATION CANCELLED BY AUTHORITY OF OCM 33331	S.A.	15SEP54
A	PROTECTIVE FINISH ADDED.	S.A.	10-13-50
	REVISIONS	BY	DATE

FRACTIONAL DIMENSIONS UNLESS SPECIFIED OTHERWISE

DEPARTMENT NO. 1974

A-265-172

DO NOT SCALE THIS DRAWING

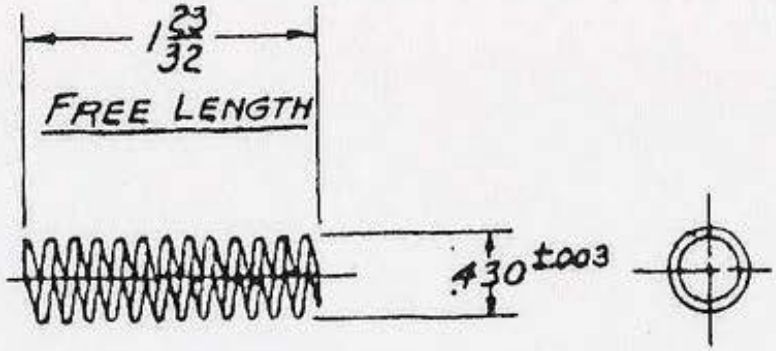

APPROVED PENDING
ORDNANCE DRAWING
LT. COL. F. J. McCollum
ORD. DEPT.
DATE MAY 24 1950

12 COILS 7 COILS PER INCH
GRIND ENDS SQUARE
LEFT-HAND
.058 DIA WIRE

ORD PART NO. 7265741

SPRING TEMPER
SET BEFORE TEMPERING

ITEM	NO. REQ.	MATERIAL	SIZE
172	1	MUSIC WIRE	.058 DIA.

HARRINGTON & RICHARDSON ARMS CO.
WORCESTER, MASS.

NAME REISING 22 CAL. BOLT-ACTION RIFLE
MOD. 865 MAINSPRING (REPEATER)

PART & NO. MAINSPG A-265172 SCALE FULL OPER. NO.

DESIGN BY DATE
DETAILED BY J. A. DATE 3-22-45
TRACED BY DATE
CHECKED BY C. T. DATE 6-12-45
APPR. BY DATE

DRAWG. NO. A-265-172 23

SHEET 1 OF 1 SHEETS

REVISIONS BY DATE

7 COILS PER INCH ADDED

FRACTIONAL DIMENSIONS ±.005 DECIMAL DIMENSIONS ±.0

A-165-37

DO NOT SCALE THIS DRAWING

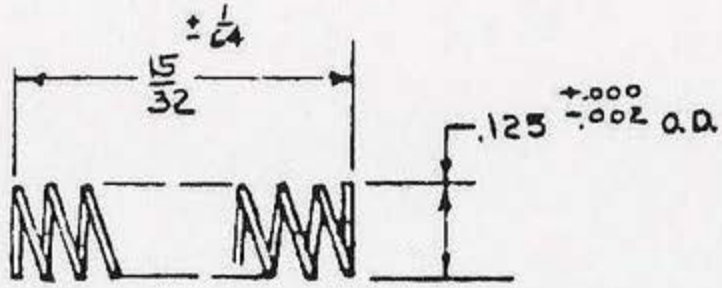

APPROVED PENDING
ORDNANCE DRAWING
LT. COL. F. Gillelland
ORD. DEPT.
DATE MAY 24, 1950

.020 MUSIC WIRE

NO. OF COILS - 9

BOTH ENDS CLOSED

AND GROUND

ORD PART NO. 7265750

SPRING TEMPER

SET BEFORE TEMPERING

ITEM	NO. REQ.	MATERIAL	SIZE
37	1	MUSIC WIRE	.020 DIA.

HARRINGTON & RICHARDSON ARMS CO.
WORCESTER, MASS.

NAME REISING 22 CAL. LONG RIFLE MOD. 165 EXTRACTOR SPRING

PART & NO. EXTRACTOR SPRING | SCALE 4/1 | OPER. NO.

DESIGN BY		DATE	
DETAILED BY CRS.		DATE 11-6-45	
TRACED BY		DATE	
CHECKED BY		DATE	
APROV'D. BY		DATE	

DRAWG. NO. A-165-37

SHEET 1 OF SHEETS

	REVISIONS	BY	DATE
D			
C			
B			
A	CLASSIFICATION CANCELLED BY AUTHORITY OF ORD PERS	S.A.	SEP

FRACTIONAL DIMENSIONS ±. DECIMAL DIMENSIONS ±

A-294-50

DO NOT SCALE THIS DRAWING

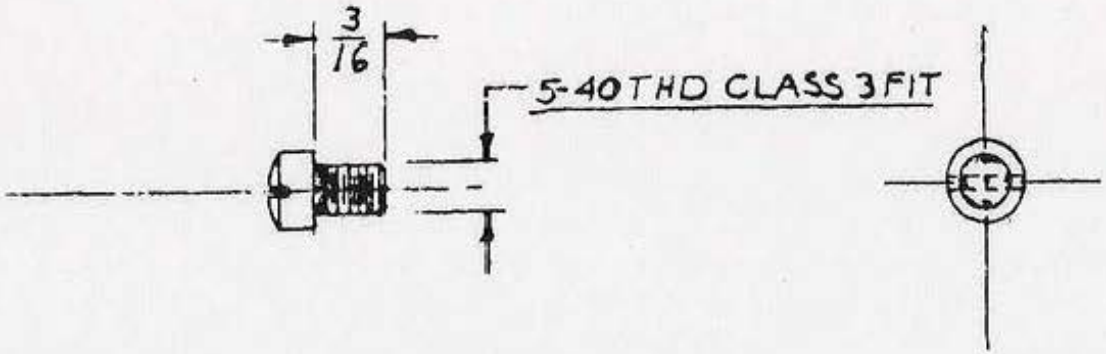

PROTECTIVE FINISH
TYPE II CLASS A
U.S.A. 57-0-2

DIMENSIONS NOT SHOWN ARE STANDARD FOR #5-40 FILLISTER HEAD MACHINE SCREW

APPROVED PENDING
ORDNANCE DRAWING
LT. COL. F. J. McMorrow
ORD. DEPT.
DATE MAY 24, 1950

ORD PART NO. 7265751

ITEM	NO. REQD.	MATERIAL	SIZE
50	2	COMMERCIAL	5-40 THD

HARRINGTON & RICHARDSON ARMS CO.
WORCESTER, MASS.

MAGAZINE GUIDE SCREW

MODEL 294 - 22 CAL. HORNET SURVIVAL WEAPON

PART & NO. MAG. GUIDE SCR | SCALE 2/1 | OPER. NO.

C			
B	CLASSIFICATION CANCELLED BY AUTHORITY OF OCM 33331	S.A.	15SEP54
A	ADDED, PROTECTIVE FINISH	S.A.	10-13-50
	REVISIONS	BY	DATE

DESIGNED BY | DATE
DETAILED BY V.C.B. | DATE FEB. 13, 50
TRACED BY E.G.W | DATE
CHECKED BY A.S.B. | DATE 2-14-50
APPVD. BY | DATE

DRAWING NO. A-294-50

SHEET 29 OF SHEETS

FRACTIONAL DIMENSIONS ± .005 UNLESS SPECIFIED OTHERWISE

A-294-53

DO NOT SCALE THIS DRAWING

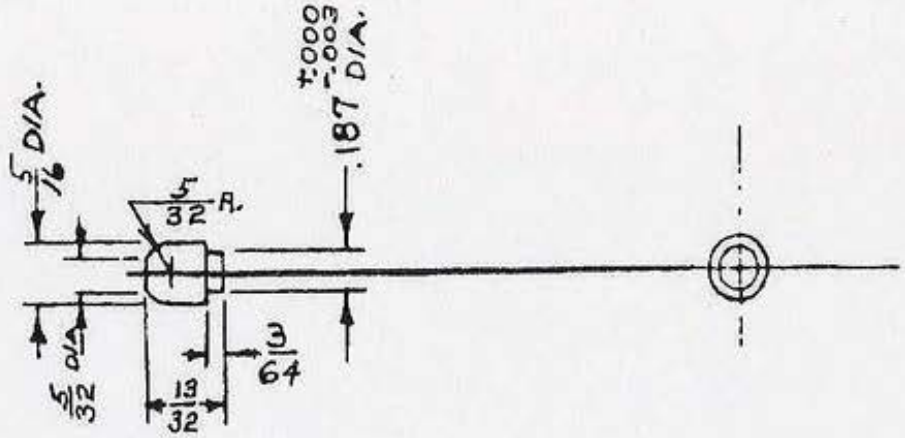

PROTECTIVE FINISH
TYPE II CLASS A
AT ASSY 7265766

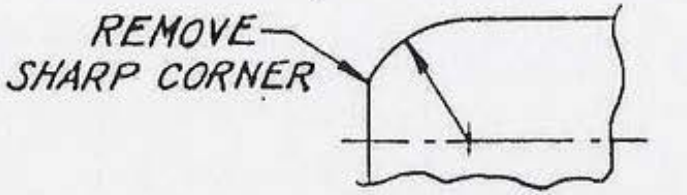

ENLARGED VIEW
SCALE 4/1

ORD. PART NO. 7265755

ITEM	NO. REQD.	MATERIAL	SIZE
53	1	1020	5/16 DIA.

HARRINGTON & RICHARDSON ARMS CO.
WORCESTER, MASS.

BRACE RELEASE BUTTON

MODEL 294 .22 CAL. HORNET SURVIVAL WEAPON

APPROVED PENDING
ORDNANCE DRAWING
LT. COL. F. H. McMorrow
ORD. CORP
DATE OCT. 19, 1950.

REVISIONS	BY	DATE
C CLASSIFICATION CANCELLED BY AUTHORITY OF OCM 33331	S.A.	16SEP54
B ADDED; ENLARGED VIEW, PROTECTIVE FINISH NOTE; REMOVED PENTRATE	S.A.	10-13-50
A 3/64 WAS 3/32; 5/32 R. WAS 1/32 R; 5/32 ADDED	TRINK	8-24-50

FRACTIONAL DIMENSIONS ± .005 UNLESS SPECIFIED OTHERWISE

PART & NO. BRACE REL. BUTTON		SCALE FULL	OPER. NO.
DESIGNED BY	DATE	DRAWING NO.	
DETAILED BY Y.C.B.	DATE 1-10-50	A-294-53	
TRACED BY E.G.W.	DATE		
CHECKED BY A.S.B.	DATE 1-10-50		
APPVD. BY	DATE	SHEET 1 OF 1 SHEETS	

32

A-294-230

DO NOT SCALE THIS DRAWING

PROTECTIVE FINISH
TYPE II CLASS A
AT ASSEMBLY WITH
7265761

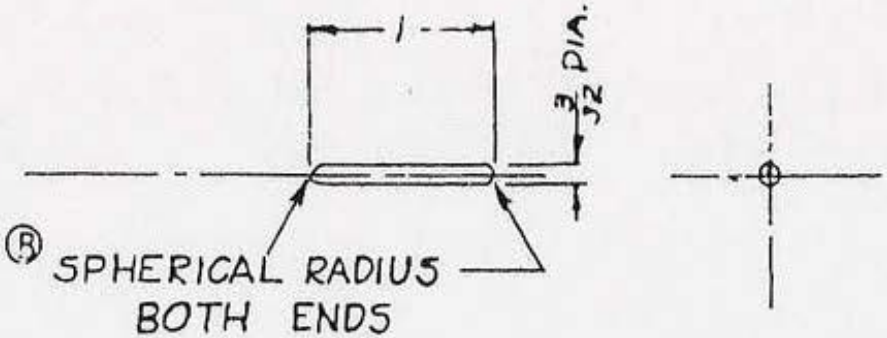

"Classification Changed to Unclassified
By Authority of OCE [illegible], [illegible] Jul 50"
[illegible] Lt Col, Ord Corps
Date 2 September 1954

APPROVED PENDING
ORDNANCE DRAWING
LT. COL. [illegible]
ORD. DEPT.
DATE MAY 24 1950

COMMERCIAL TOL.
±.000 / ±.002

ORD PART NO. 7265758

ITEM	NO. REQD.	MATERIAL	SIZE
230	1	B-1113	.0937 DIA.

HARRINGTON & RICHARDSON ARMS CO.
WORCESTER, MASS.

BARREL RETAINING SCREW CROSS PIN

MODEL 254—.22 CAL. HORNET SURVIVAL WEAPON

PART & NO. BRL. RTNG. SCR. CROSS PIN | SCALE FULL | OPER. NO.

	REVISIONS	BY	DATE
C[1]	SEE NOTE ABOVE.	S.A.	2 SEP 54
B	SPHER RAD. WAS 1/64 × 45°	S.A.	1-7-52
A	ADDED, PROTECTIVE FINISH	S.A.	10-13-50

DESIGNED BY	DATE
DETAILED BY V.C.B	DATE FEB 13, 50
TRACED BY	DATE
CHECKED BY [illegible]	DATE 2-14-50
APPVD. BY	DATE

DRAWING NO. A-294-230

SHEET 34 OF SHEETS

FRACTIONAL DIMENSIONS ± .005 UNLESS SPECIFIED OTHERWISE

A-294-56

DO NOT SCALE THIS DRAWING

PROTECTIVE FINISH
TYPE II CLASS A
U.S.A. 57-0-2

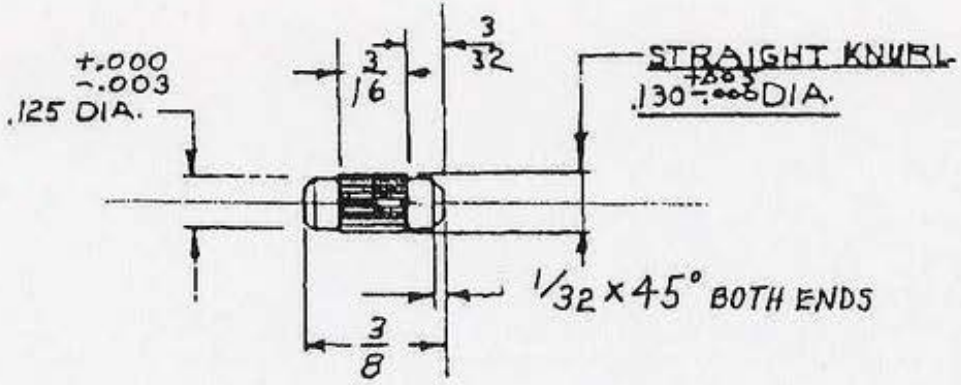

CYANIDE HARDEN

ORD. PART NO. 7265759

ITEM	NO. REQD.	MATERIAL	SIZE
56	2	B-1113	.125 DIA.

SUPERSEDES DWG SAME NO. DATED 1-10-50

APPROVED PENDING
ORDNANCE DRAWING
LT. COL. [illegible]
ORD. CORP
DATE OCT 19, 1950.

HARRINGTON & RICHARDSON ARMS CO.
WORCESTER, MASS.

SHOULDER BRACE PINS

MODEL 294 .22 CAL. HORNET SURVIVAL WEAPON

PART & NO. SHOULDER BRACE PINS | SCALE 2/1 | OPER. NO.

C			
B	CLASSIFICATION CANCELLED BY AUTHORITY OF OCM 33331	S.A.	15SEP54
A	PROTECTIVE FINISH ADDED.	S.A.	10-13-50
	REVISIONS	BY	DATE

DESIGNED BY	DATE
DETAILED BY Y C B.	DATE FEB 7, 50
TRACED BY E.G.W.	DATE
CHECKED BY [illegible]	DATE SEPT. 8, 50
APPVD. BY	DATE

DRAWING NO. A-294-56

SHEET 35 OF SHEETS

FRACTIONAL DIMENSIONS ± .005 UNLESS SPECIFIED OTHERWISE

57

A-294-169

DO NOT SCALE THIS DRAWING

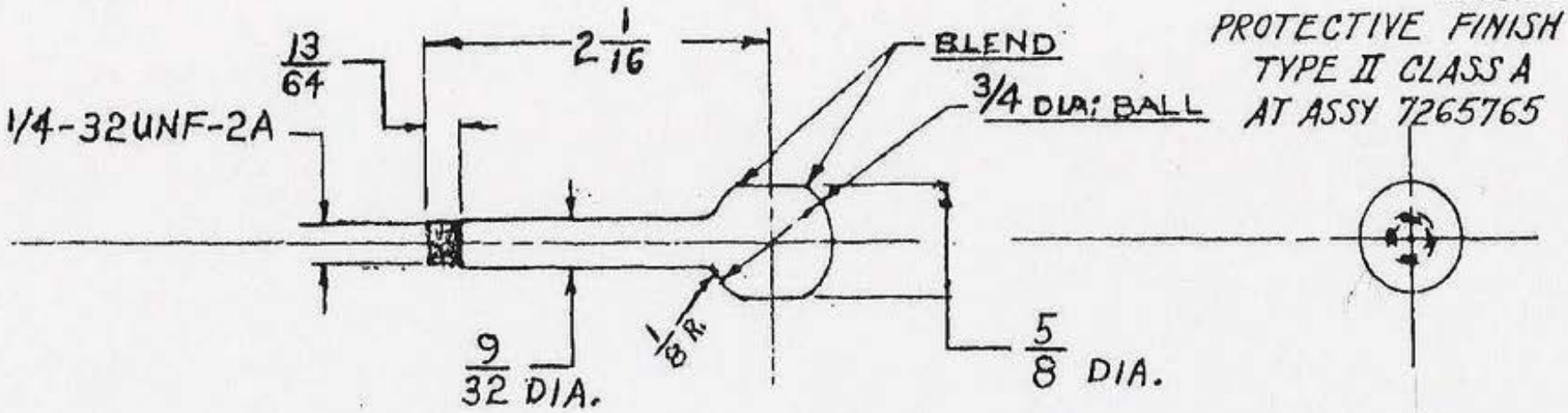

APPROVED PENDING
ORDNANCE DRAWING
LT. COL. E. Wellborner
ORD. DEPT.
DATE MAY 24 1950

ORD PART NO. 7265763

ITEM	NO. REQD.	MATERIAL	SIZE
		A.I.S.I. B-1113	ALTERNATE
169	1	AISI - C1020	5/8 DIA 2 9/16

HARRINGTON & RICHARDSON ARMS CO.
WORCESTER, MASS.

BOLT HANDLE

MODEL 294 .22 CAL. HORNET SURVIVAL WEAPON

PART & NO. BOLT HANDLE #169 | SCALE FULL | OPER. NO.

	REVISIONS	BY	DATE
C	CLASSIFICATION CANCELLED BY AUTHORITY OF OCM 33331	S.A.	15SEP54
B	A.I.S.I. - C1020 WAS SAE 1020, ALT MAT. ADDED	S.A.	1-7-52
A	ADDED, PROTECTIVE FINISH	S.A.	10-13-50

DESIGNED BY	DATE
DETAILED BY Y. C. B	DATE FEB. 10-50
TRACED BY E.G.W	DATE
CHECKED BY A.S.B.	DATE 2-11-50
APPVD. BY	DATE

DRAWING NO. A-294-169

SHEET 39 OF SHEETS

FRACTIONAL DIMENSIONS ± .005 UNLESS SPECIFIED OTHERWISE

DO NOT SCALE THIS DRAWING

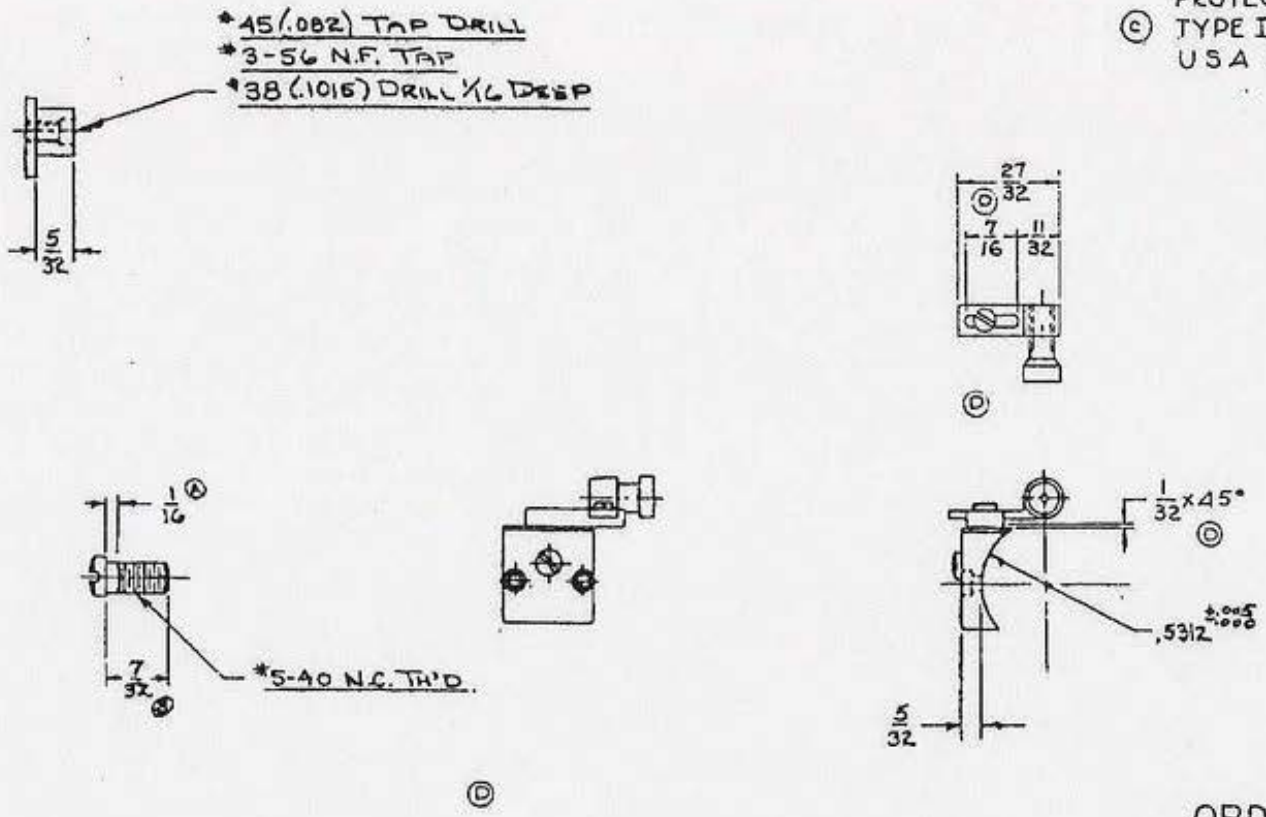

PROTECTIVE FINISH
(C) TYPE III CLASS A GRADE I
USA 57-0-2

APPROVED PENDING
ORDNANCE DRAWING
LT. COL. F. H. McMorrow
ORD. CORP
DATE OCT 19, 1950

ORD. PART NO. 7265767

ITEM	NO. REQD.	MATERIAL	SIZE
109	1		LYMAN #55-H

HARRINGTON & RICHARDSON ARMS CO.
WORCESTER, MASS.

REAR SIGHT

MODEL 294 CAL. .22 HORNET SURVIVAL WEAPON

USE LYMAN #55-H SIGHT
REMOVE LEVER & SPRING WASHER

PART & NO. REAR SIGHT		SCALE	OPER. NO.
DESIGNED BY	DATE	DRAWING NO.	
DETAILED BY H.S.B.	DATE 3-20-50	B-294-109	
TRACED BY	DATE		
CHECKED BY	DATE 6 OCT. 8-50		
APPVD. BY	DATE	SHEET 1 OF 1 SHEETS	57

E'	CLASSIFICATION CANCELLED BY AUTHORITY OF OCM 33331	S.A.	16SEP54
D	NOTE REMOVED; 7/32 x 45° DIM ADDED; SLIDE DIMS. ADDED, VIEW ADDED	TRINK 3-6-51	S.A. 3-22-51
C	ADDED, PROTECTIVE FINISH	S.A.	10-13-50
B	7/32 NAS 44		9-8-50
A	ADDED 1/16 DIM ON SCREW	TRINK	7/26/50
	REVISIONS	BY	DATE

FRACTIONAL DIMENSIONS ± .005 UNLESS SPECIFIED OTHERWISE

42

DO NOT SCALE THIS DRAWING

PROTECTIVE FINISH :
Ⓐ TYPE II CLASS A U.S.A.57-0-2
AFTER SILVER SOLDERING.

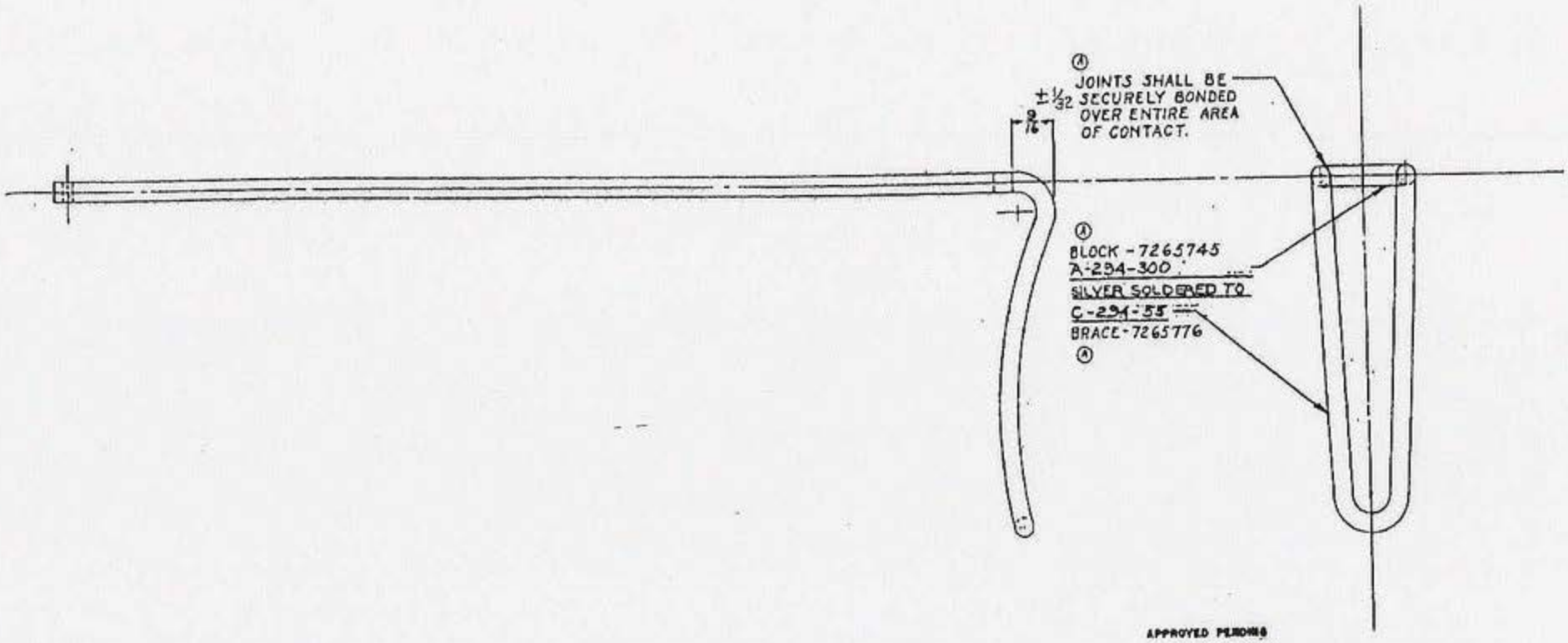

APPROVED PERSONS
ORDNANCE DRAFTER
LT. COL.
ORD. CORP
DATE: OCT. 19, 1950

ORD. PART NO. 7265775

ITEM	NO. REQD.	MATERIAL	SIZE

HARRINGTON & RICHARDSON ARMS CO.
WORCESTER, MASS.

SHOULDER BRACE ASSEMBLY

MODEL 294-22 CAL. HORNET SURVIVAL TORCHES

PART & ASSEMBLY DROP BRACE ASSY		SCALE FULL	DWG. NO.
DESIGNED BY	DATE		DRAWING NO.
DETAILED BY V.C.B.	DATE 10/19/50		C-294-310
TRACED BY E.G.H.	DATE		
CHECKED BY R.B.	DATE 2-28-50		
APPVD. BY	DATE		SHEET OF

CLASSIFICATION CANCELLED BY AUTHORITY OF OCM 33331	S.A.	10SEP54
ADDED: PROTECTIVE FIN, NOTE TO BOND JOINTS, CHG DIM. PT. NOS.	S.A.	10-13-50
REVISIONS	BY	DATE

FRACTIONAL DIMENSIONS ± UNLESS SPECIFIED OTHERWISE

DO NOT SCALE THIS DRAWING

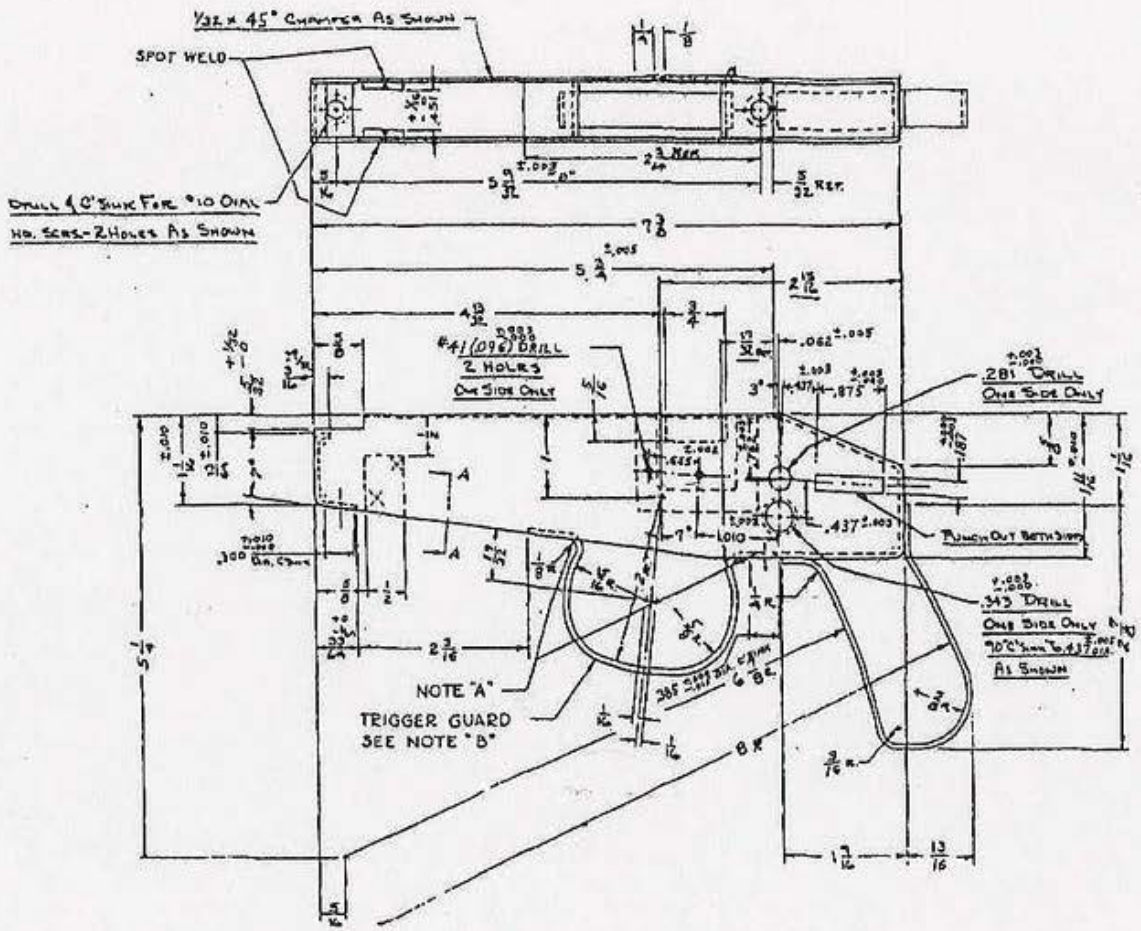

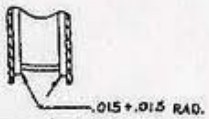

SECTION A-A

REMOVE ALL BURRS, SHARP CORNERS & EDGES.

PROTECTIVE FINISH TYPE II CLASS A AFTER BRAZING.

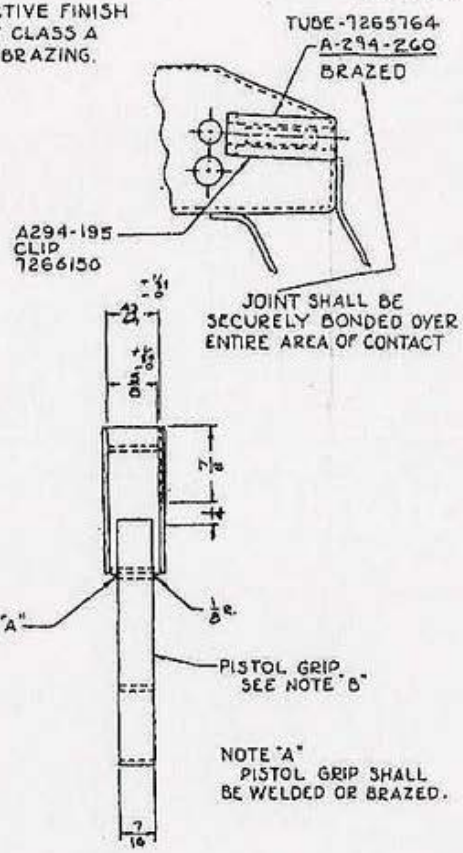

NOTE "A"
PISTOL GRIP SHALL BE WELDED OR BRAZED.

APPROVED PENDING ORDNANCE DRAWING
LT. COL. [signature]
(ORD. CORPS)
DATE OCT 19, 1950

NOTE: "B"

PISTOL GRIP AND TRIGGER GUARD SHALL LINE UP WITH VERTICAL AND LONGITUDINAL AXIS WITHIN 2° OF ANGLE.

ORD. PART NO. 7265777

		AISI-C1015 COLD FINISHED	1/4 GA. (.016) [illegible]
ITEM	NO. REQD.	MATERIAL	SIZE

HARRINGTON & RICHARDSON ARMS CO.
WORCESTER, MASS.

FRAME
.22 CAL. HORNET SURVIVAL WEAPON

MODEL .294

PART & NO. FRAME #200		SCALE FULL	DWG. NO. ~
DESIGNED BY	DATE	DRAWING NO.	
DRAWN BY [illegible]	DATE 7-25-50	C-294-200	
TRACED BY	DATE		
CHECKED BY [illegible]	DATE JULY 31 50		
APPR. BY	DATE	SHEET 1 OF 1 SHEETS	

G1	CLASSIFICATION CANCELLED BY AUTHORITY OF OCM 33331	S.A.	16SEP54
F	CHANGED, A294-130 TO A294-195, 7265741 to 7264154	S.A.	1-7-52
E	ADDED SUPPORT PLATES & SECTION A-A	S.A.	1-30-51
D	CHANGED: NOTE A	S.A.	1-2-51
C	ADDED, PRO FINISH, BONDED NOTE, NOTES "A" & "B"	S.A.	10-13-50
B	2 1/16 WAS 2 1/32 REF. DIM'S ADDED; 15/16 ADDED	[illegible]	7-28-50
A	ADDED 7/16 DIA'S	[illegible]	7-27-50
	REVISIONS	BY	DATE

FRACTIONAL DIMENSIONS ± 1/64 UNLESS SPECIFIED OTHERWISE

SUPERSEDES DWG. SAME NO. DATED 1-11-50.

50

DO NOT SCALE THIS DRAWING

PROTECTIVE FINISH
TYPE II CLASS A AT
ASSEMBLY 7265769

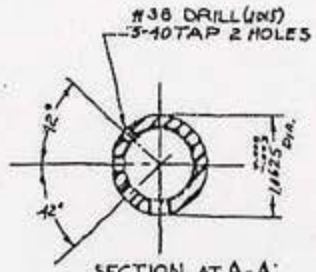

SECTION AT A-A

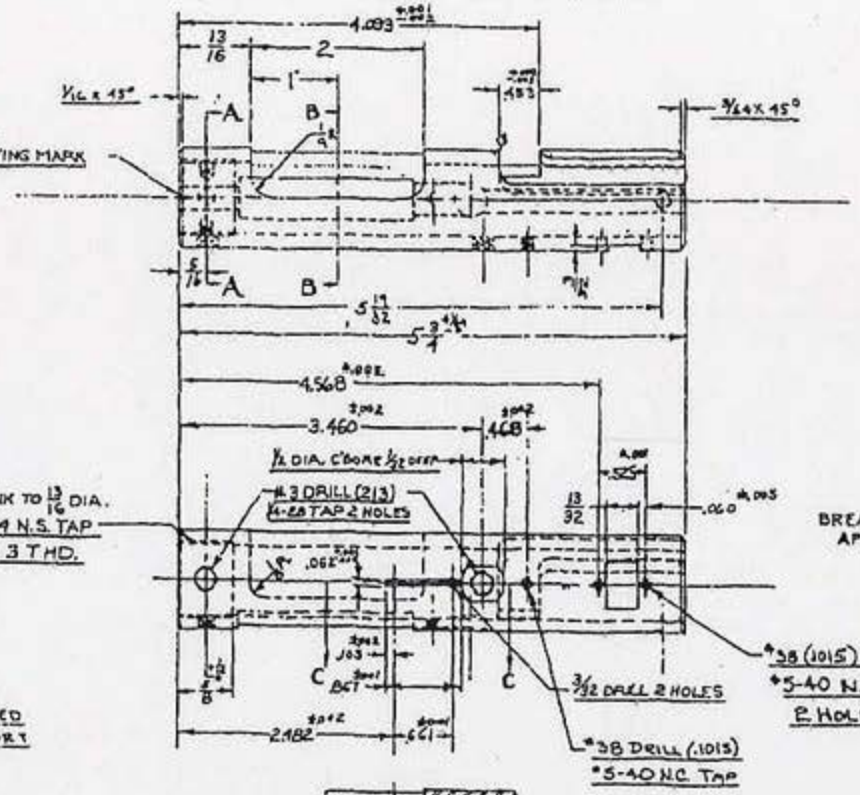

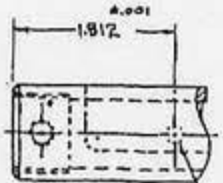

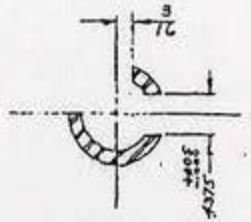

SECTION AT B-B

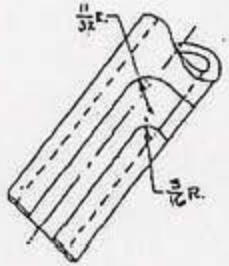

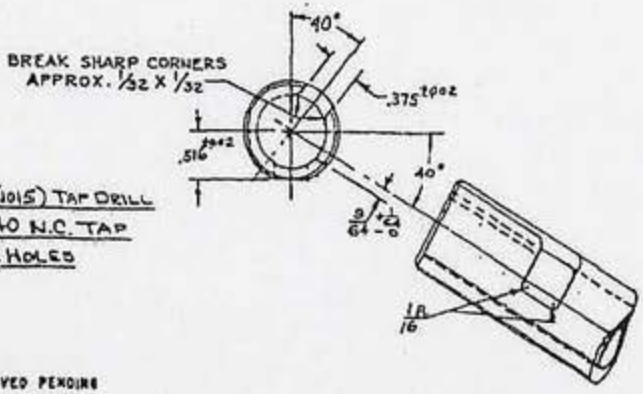

REMOVE ALL BURRS, SHARP EDGES & CORNERS TO PERMIT FREE MOVEMENT OF BOLT.

M	CLASSIFICATION CANCELLED BY AUTHORITY OF OCN 33331	S.A.	15 SEP 54
L	C1118 WAS B1113	S.A.	1-7-52
K	ADDED NOTE. 3/16 WAS 1/8 40° WAS 50° REMOVED .06 DIA	S.A.	8-12-51
J	[illegible]	S.A.	8-13-50

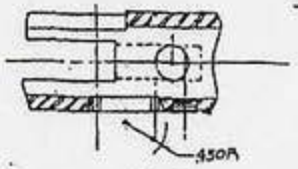

SECTION C-C

APPROVED PENDING
ORDNANCE REVIEW
LT. COL. [illegible]
ORD. CORP
DATE OCT. 19, 1950

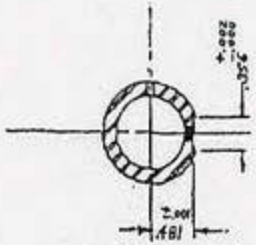

SECTION AT D-D

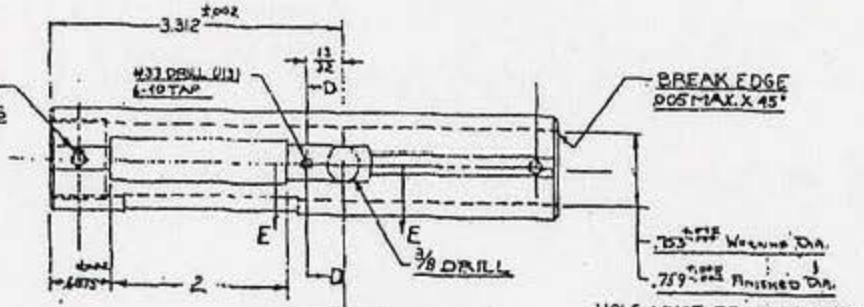

HOLE MUST BE UNIFORMLY SMOOTH

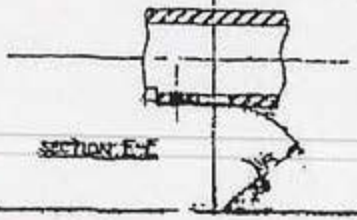

SECTION E-E

H	[illegible]	TRIM	9-28-50
G	H. C'BORE 1/8 DEEP ADDED	A.S.S.	8-29-50
F	[illegible]	[illegible]	8-1-50
E	[illegible]	[illegible]	7-31-50
D	[illegible]	[illegible]	7-27-50
C	[illegible] NEW SPRING WORKING HOLE	[illegible]	7-24-50
B	[illegible]	TRIM	[illegible]
A	[illegible]	[illegible]	[illegible]
	REVISIONS	BY	DATE

UNLESS SPECIFIED OTHERWISE

ORD. PART NO. 7265779

1	1	A151 - C1118	
ITEM	NO. REQD.	MATERIAL	SIZE

HARRINGTON & RICHARDSON ARMS CO
WORCESTER, MASS.

RECEIVER

C294-1

ORDNANCE DRAWING - SIZE B

NOTE:
SECTIONS MARKED "A" TO BE SOLID BLACK.

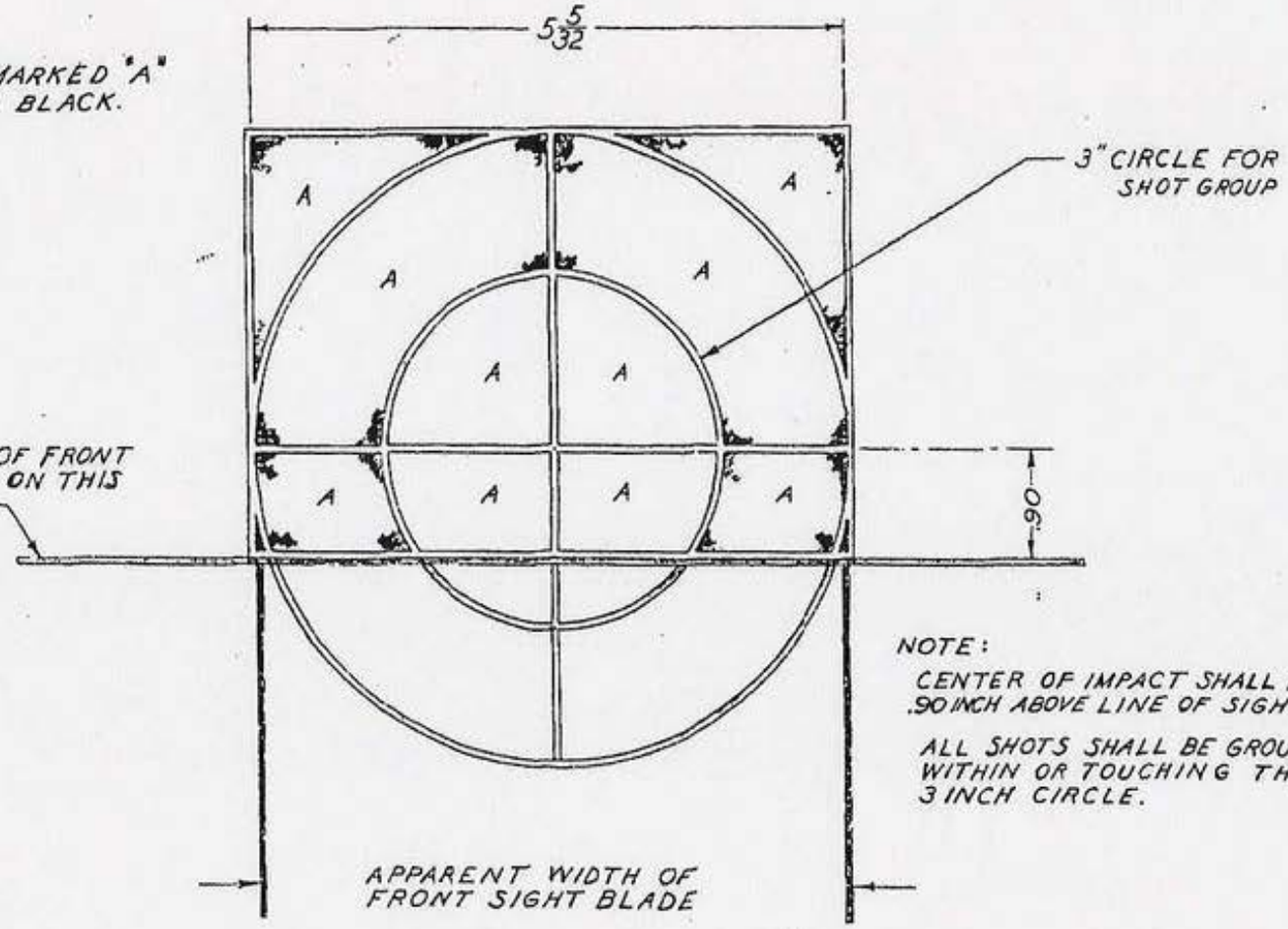

NOTE:
CENTER OF IMPACT SHALL BE .90 INCH ABOVE LINE OF SIGHT.

ALL SHOTS SHALL BE GROUPED WITHIN OR TOUCHING THE 3 INCH CIRCLE.

TARGETING DIAGRAM

RIFLE, SURVIVAL, CAL. 22, M4 (HORNET CARTRIDGE)
FOR 50 YARD RANGE

ORIGINAL DATE OF DRAWING MARCH 12, 1951

REVISIONS

NO.	DATE	WAS (or ECO NO.)	BY	CHK
A	4-24-51	ECO #15167		

HEAT TREATMENT & PROTECTIVE FINISH

PHYSICAL PROPERTIES		DRAWING PERTAINS TO DWG NO.	MAJOR ITEM
YP		F7162911	RIFLE, SURVIVAL
TS			CAL. .22, M4
EL %			
RED.			
BH			
RCH.			
WEIGHT		DO NOT -DO-	APPLY PART NO. (As Specified)

SCALE 1/1

DRAFTSMAN RCA

CHECKER W. L. M.

TOLERANCES OR DIMENSIONS (Unless Otherwise Specified)

TRACER

CHECKER

ENGINEER R. J. L.

ENGINEER

FROM FIN. SURFACES
DECIMAL ±
FRACTIONAL ±
ANGULAR ±
FROM UNFIN. SURFACES
FRACTIONAL ±
ANGULAR ±
SHARP CORNERS AND EDGES BROKEN TO APPROX. IN.

SUBMITTED

ORD DEPT U S ARMY

APPROVED BY ORDER OF THE CHIEF OF ORDNANCE
J. A. Smith
ORD DEPT U S ARMY

ORD SIZE B 7265852

ORDNANCE DEPT U S ARMY

DO NOT SCALE THIS DRAWING

PROTECTIVE FINISH
TYPE II CLASS A
U.S.A. 57-O-2

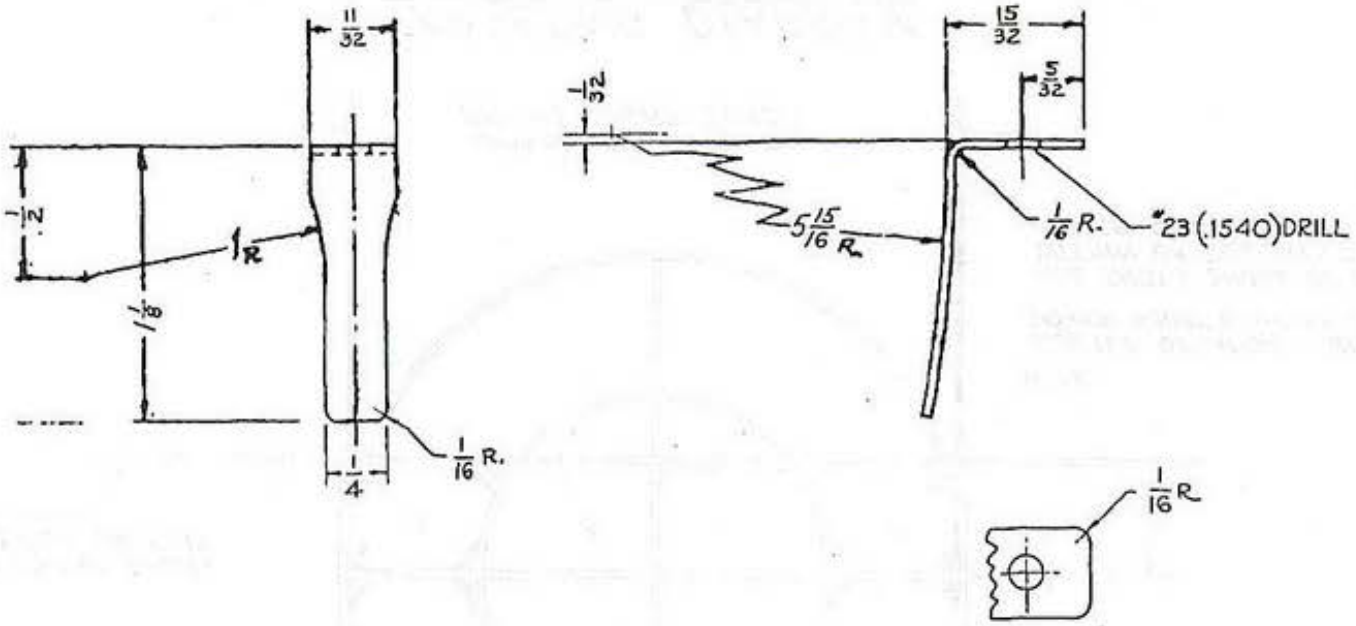

APPROVED PENDING
ORDNANCE DRAWING
LT. COL. F. W. Williamson
ORD. CORP.
DATE NOV. 22, 1950.

SPRING TEMPER

ORD. PART NO. 7265855

ITEM	NO. REQD.	MATERIAL	SIZE
350	1	SPRING STEEL	Birmingham #26 (.082)

HARRINGTON & RICHARDSON ARMS CO.
WORCESTER, MASS.

MAGAZINE RELEASE SPRING REINFORCEMENT

.22 CAL. HORNET SURVIVAL WEAPON

MODEL 294

PART & NO. MAG. RELEASE SPRING #350 — SCALE 2:1 — OPER. NO. —

DESIGNED BY	DATE	DRAWING NO.
DETAILED BY R.S.R.	DATE 10-10-50	B-294-350
TRACED BY E.G.W.	DATE	
CHECKED BY	DATE Oct 13-50	
APPR. BY	DATE	SHEET 1 OF 1 SHEETS — 57

B	VIEW ADDED, 7/16 R ADDED, #23 (.1540) DRILL WAS #27 (.1440) DRILL, CONTOUR CHANGED, 5/32 WAS 17/32, 11/32 WAS 27/64, 1/32 ADDED, 15/32 WAS 17/32, 5/32 WAS 7/32.	S.A.	5-15-51
A	PROT. FINISH, NOTE, #27 (.1440) DRILL & REINFORCEMENT ADDED	S.A.	11-28-50
	REVISIONS	BY	DATE

REMOVE ALL BURRS,
SHARP CORNERS & EDGES

55

DO NOT SCALE THIS DRAWING

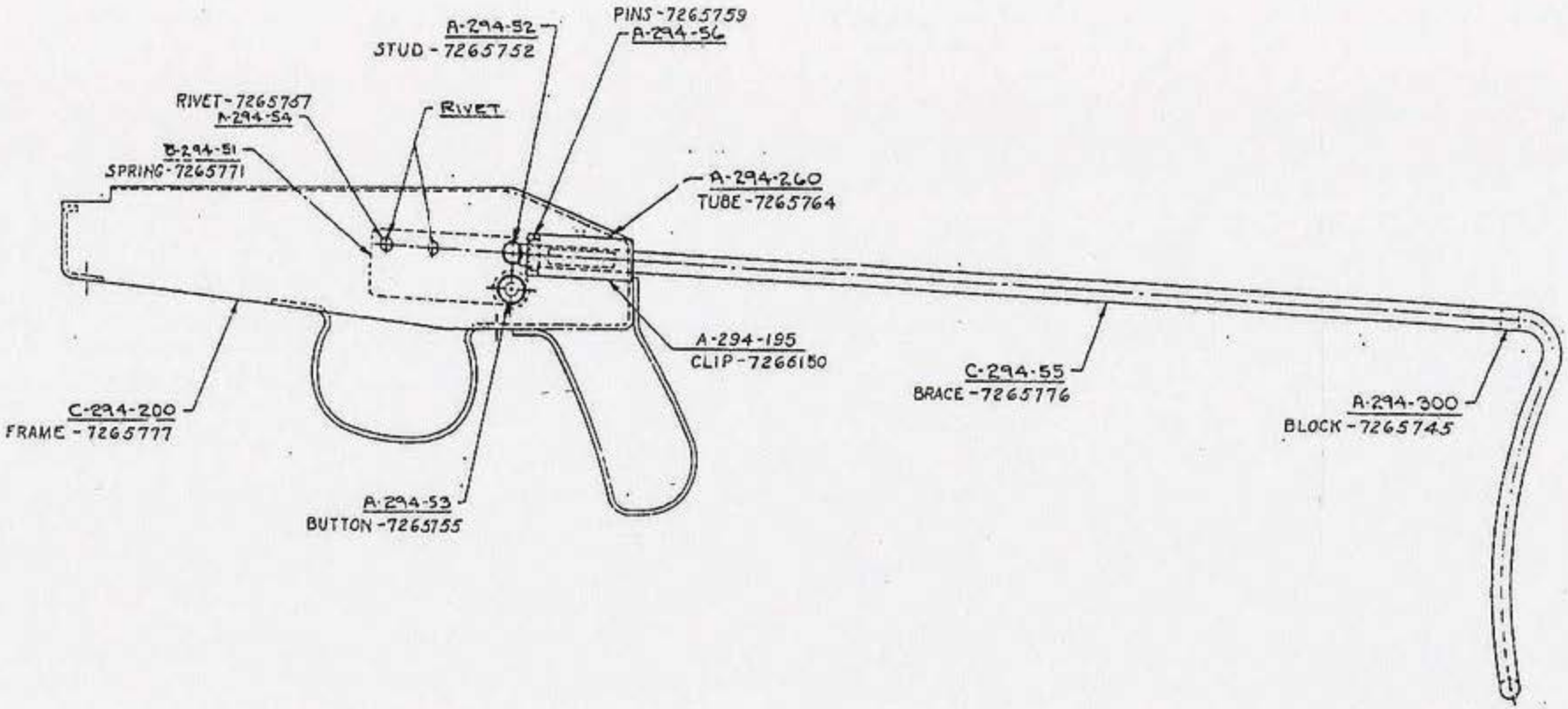

APPROVED PENDING
ORDNANCE DRAWING
LT. COL. F. L. Wellwood
ORD. CORP
DATE OCT. 19, 1950

ORD. PART NO. 7265893

ITEM	NO. REQD.	MATERIAL	SIZE

HARRINGTON & RICHARDSON ARMS CO.
WORCESTER, MASS.

FRAME ASSEMBLY
.22 CAL. HORNET SURVIVAL WEAPON
MODEL 294

PART & NO. FRAME ASSEMBLY #220		SCALE FULL	OPER. NO.
DESIGNED BY	DATE	DRAWING NO.	
DETAILED BY A.C.S.	DATE 9-7-50	C-294-220	
TRACED BY	DATE		
CHECKED BY	DATE SEPT. 8-50		
APPVD. BY	DATE	SHEET 1 OF 1 SHEETS	

C	CLASSIFICATION CANCELLED BY AUTHORITY OF OCM 33331	S.A.	15 SEP 54
B	CHANGED; A294-130 TO A294-195, 7265742 TO 7266150	S.A.	1-7-52
A	REMOVED: NOTES SILVER SOLDER, ADDED: GRD. PT. NOS.	S.A.	10-13-50
	REVISIONS	BY	DATE

FRACTIONAL DIMENSIONS ± .005 UNLESS SPECIFIED OTHERWISE

-V

DO NOT SCALE THIS DRAWING

DEC 6 1951

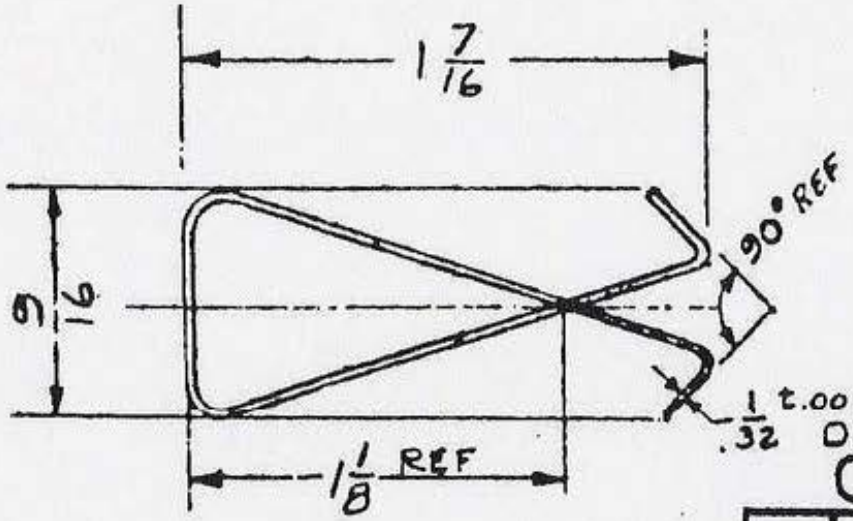

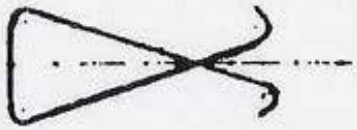

ACTUAL SIZE

ORD. PART NO. 7266150

ITEM	NO. REQD.	MATERIAL	SIZE
	2	SILVER SOLDER	1/32 ±.005 DIA.

HARRINGTON & RICHARDSON ARMS CO.
WORCESTER, MASS.

SILVER SOLDER CLIP
(BRACE TUBE)

MODEL 294 - 22 CAL HORNET SURVIVAL WEAPON

APPROVED PENDING ORDNANCE DRAWING
LT. COL. [illegible]
ORD. CORP.
DATE JAN. 7, 1952

C			
B			
A			
	REVISIONS	BY	DATE

FRACTIONAL DIMENSIONS ± .005 UNLESS SPECIFIED OTHERWISE

PART & NO. SILVER SOLDER CLIP-195		SCALE 2:1	OPER. NO. —
DESIGNED BY	DATE	DRAWING NO.	
DETAILED BY Powers	DATE 11-28-1950	A-294-195	
TRACED BY	DATE		
CHECKED BY	DATE NOV. 29 '50		
APPVD. BY	DATE	SHEET 1 OF 1 SHEETS	

DEFIANCE NO. 1075

49

DO NOT SCALE THIS DRAWING

DEC 6 1951

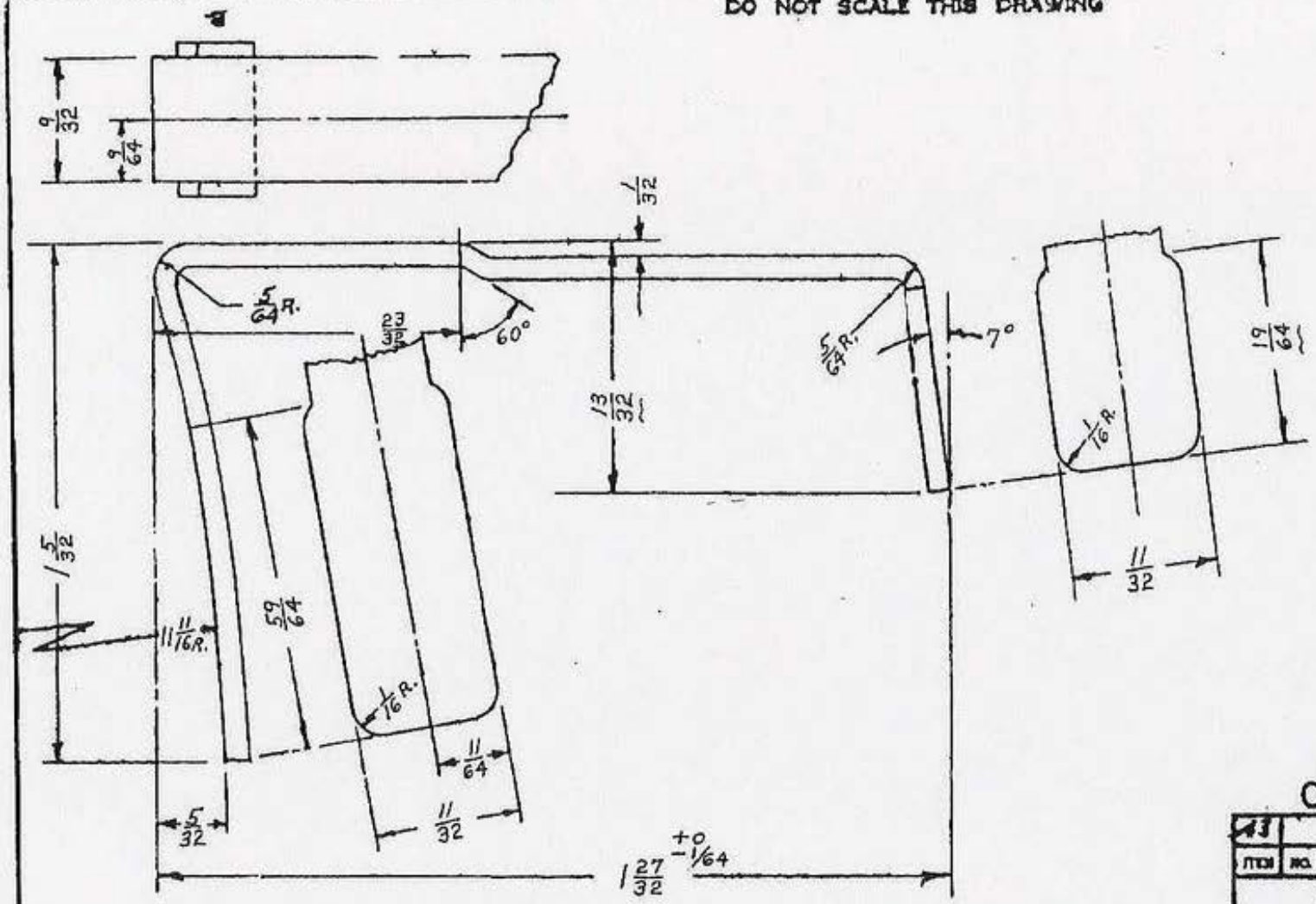

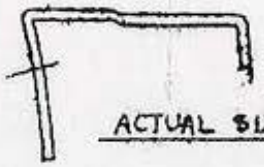

ACTUAL SIZE

PROTECTIVE FINISH
OXIDE BLACK TYPE III
CLASS A GRADE I
U.S.A. 57-0-2

APPROVED PENDING
ORDNANCE DRAWING
LT. COL.
ORD. CORPS
DATE JAN 7, 1952

ORD. PART NO. 7266151

ITEM	NO. REQD.	MATERIAL	SIZE
43		A.I.S.I. C-1020	

HARRINGTON & RICHARDSON ARMS CO.
WORCESTER, MASS.

MAGAZINE FOLLOWER
CAL. HORNET SURVIVAL WEAPON

SCALE 4:1

DRAWING NO. B-294-43

DATE 12-5-50

REVISIONS	BY	DATE

UNLESS SPECIFIED OTHERWISE ± .005

70

DO NOT SCALE THIS DRAWING

DEC 6 1951

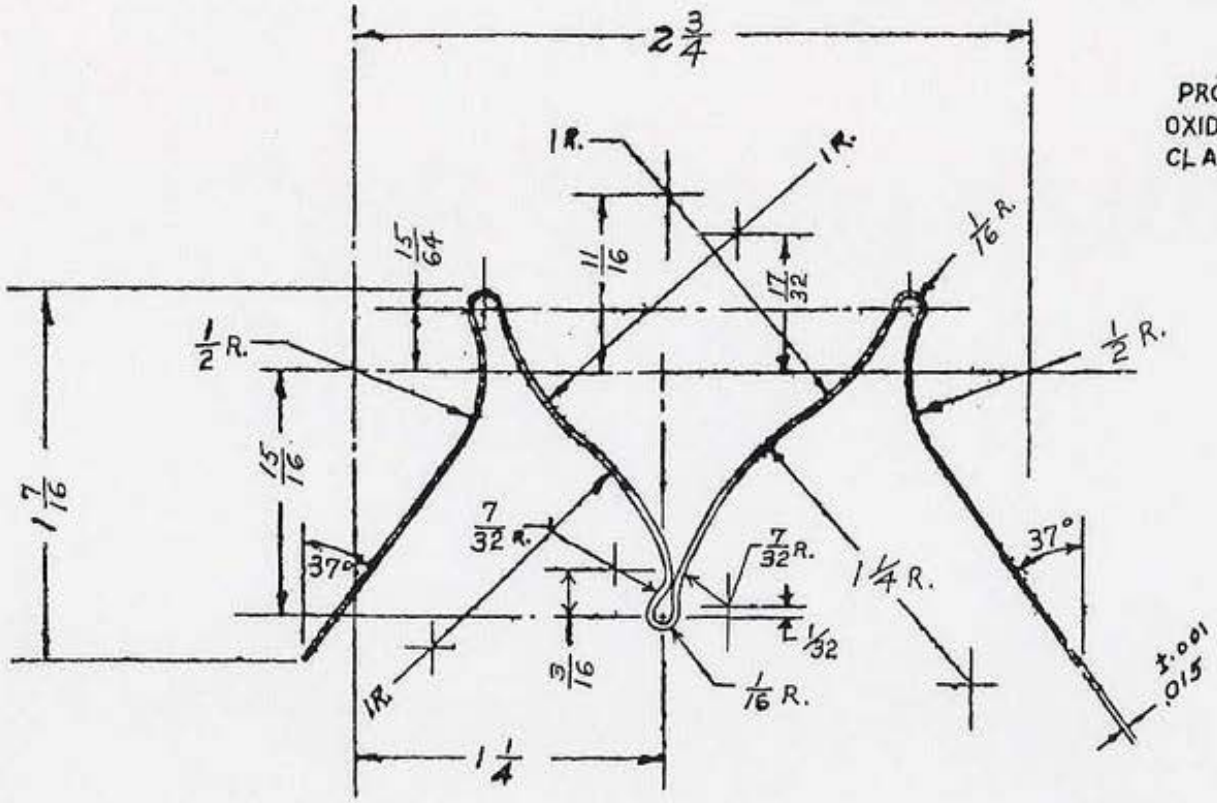

PROTECTIVE FINISH
OXIDE BLACK TYPE III
CLASS A GRADE 1
U.S.A. 57-0-2

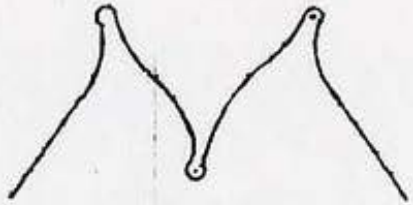

ACTUAL SIZE

APPROVED BENDING
OR DRAWING
LT. COL.
ORD. OFFICER
DATE JAN 7 1952

SPRING TEMPER

ORD. PART NO. 7266152 Ⓐ

11		SPRING STEEL	.016 ±.001
ITEM	NO. REQD.	MATERIAL	SIZE

HARRINGTON & RICHARDSON ARMS CO.
WORCESTER, MASS.

MAGAZINE SPRING
.22 CAL. HORNET SUPERPOSED TWO BARREL

MODEL 294

PART & NO.		SCALE 2:1	OPER. NO.
DESIGNED BY	DATE	DRAWING NO.	
		B 294-44	

D			
C			
B	REVISED PER MIL STANDARD 27 (016) 6A		
A	REVISIONS	BY	DATE

FUNCTIONAL DIMENSIONS ± .005" UNLESS SPECIFIED OTHERWISE

71

PIECE MARK	HEADSPACE LENGTH "L"	
7314929A	.062	
7314929D	.065	
7314929E	.069	

MARKING:
R. S. CAL. .22 (H) M4
HEADSPACE
7314929, ORD. DEPT. U. S. A. INSP.

REVISIONS		
COMPONENT		GAGE
DRG. NO.	DATE	DATE
		7-19-50

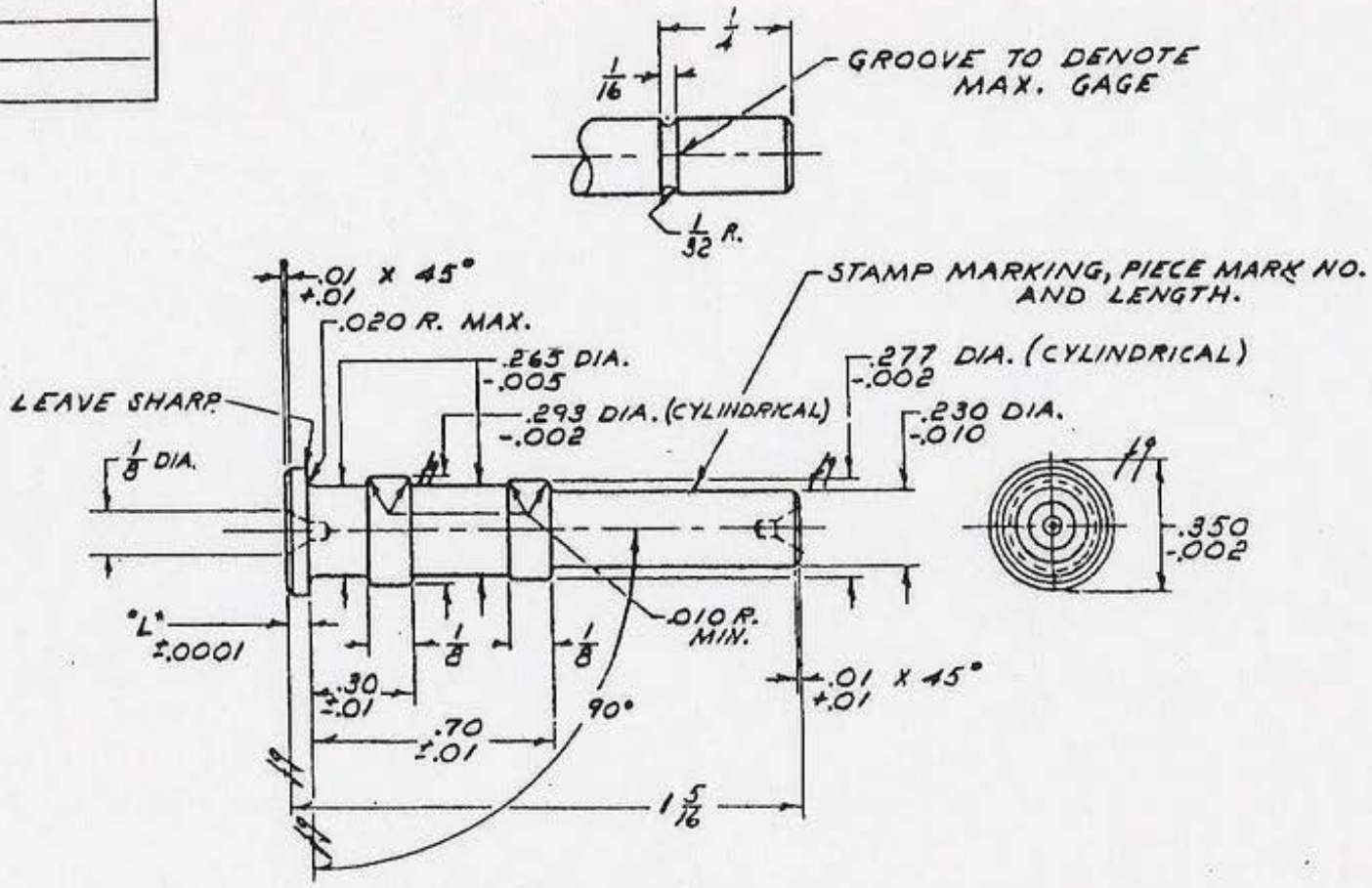

HEADSPACE · GAGE
ONE TOOL STEEL
FINISH & HARDEN *
SCALE 3:1

* HARDEN TO ROCKWELL SCALE "C" 63 MIN
LAP ⌀ SURFACES
REMOVE ALL SHARP EDGES

TOLERANCE OF ± ☆ ALLOWED ON ALL DIMENSIONS UNLESS OTHERWISE SPECIFIED

DRG. PERTAINS TO
B 7314840 GAGE LISTS

D'FTSMAN	TRACER	L'D'G D'FTSMAN
D.E.		RAB
CHECKER	CHECKER	CHIEF D'FTSMAN
RAB		amo.

SUBMITTED:
PROD. ENG. ORD. DEPT. U. S. A.
APPROVED:
J. L. Doffman
CHIEF INSP. ORD. DEPT. U. S. A.

SPRINGFIELD ARMORY
DATE JUNE 22, 1950
B 7314929

73

MARKING:-
R. S. CAL. .22 (H) M4
BARREL 7265718
DEPTH OF CHAMBER
7314930A, ORD. DEPT. U. S. A. INSP.

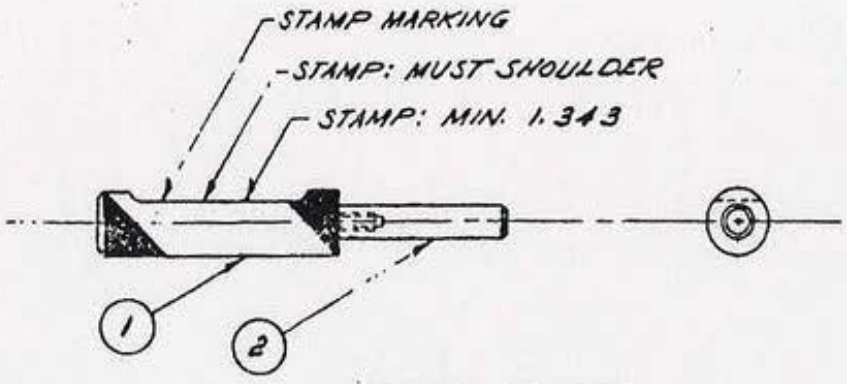

DEPTH GAGE
ASSEMBLY

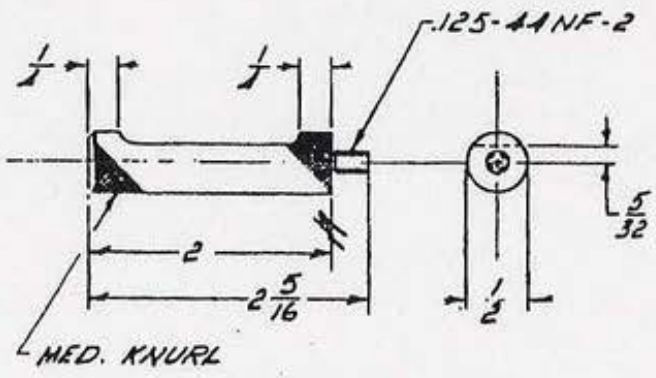

ONE TOOL STEEL
FINISH & HARDEN * (1)

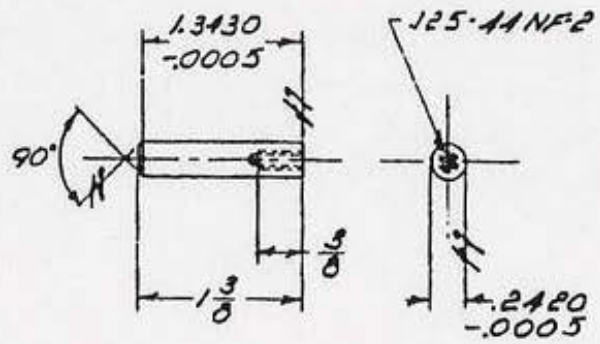

ONE TOOL STEEL
FINISH & HARDEN * (2)

TOLERANCE OF ± 1/32 ALLOWED ON ALL DIMENSIONS UNLESS OTHERWISE SPECIFIED

* HARDEN TO ROCKWELL SCALE "C" 63 MIN.
LAP H SURFACES
REMOVE ALL SHARP EDGES

REVISIONS

COMPONENT		GA
DWG. NO.	DATE	DA
7265718		10-13

DRG. PERTAINS TO
#7314840-1 GAGE LI

DRAWN D.C.	TRACER	L'D'R DFTM RAB
CHECKER RAB	CHECKER	CHIEF DFTM

SUBMITTED:-
ORD. DEPT. U.

APPROVED:-
J. L. Duffman
CHIEF INSP. ORD. DEPT. U.

SPRINGFIELD ARMO

DATE OCT. 13, 195

B 7314930

DO NOT SCALE THIS DRAWING

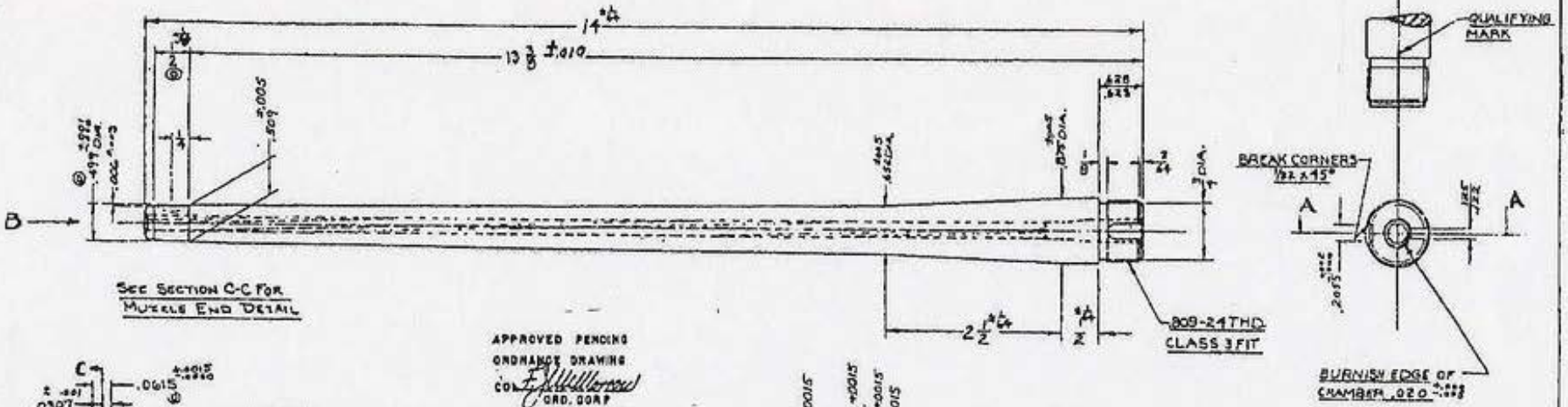

APPROVED PENDING ORDNANCE DRAWING
CO. F. H. Williams
ORD. CORP
DATE JAN. 29, 1951

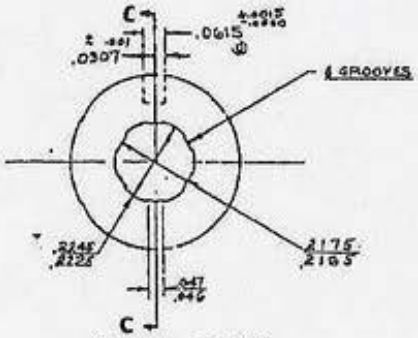

VIEW B SCALE 4/1
RIFLING 16 IN. LEAD

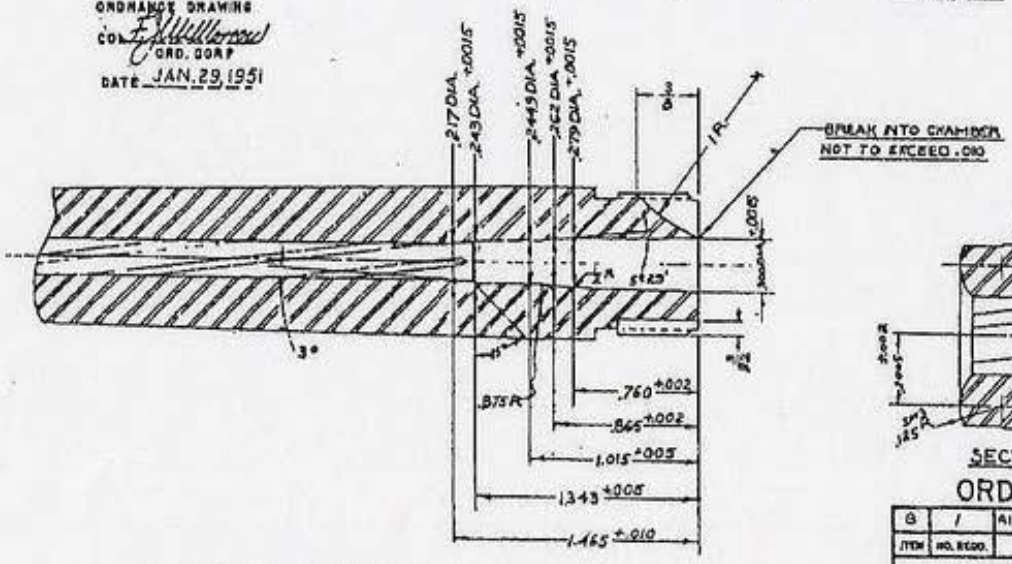

PARTIAL SECTION A-A SCALE 2/1
ALL DIMENSIONS FOR CHAMBER ARE MINIMUM

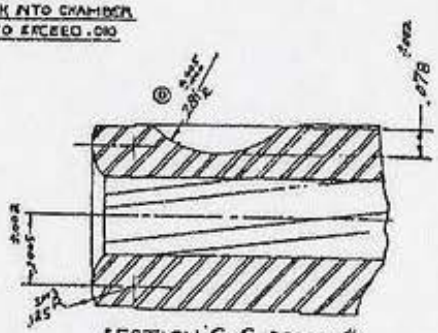

SECTION C-C SCALE 4/1

PROT. FINISH
TYPE II CLASS A, EXTERIOR ONLY
U S A SPEC. 57-0-2

D	[illegible]	[illegible]	[illegible]
C	.060 [illegible] WAS .010 R	[illegible]	[illegible]
B	C-1137 OR EQUAL WAS 1337	[illegible]	11-2-50
A	REMOVED REAR DETAIL	[illegible]	7-12-50
	REVISIONS	BY	DATE

FRACTIONAL DIMENSIONS ± UNLESS SPECIFIED OTHERWISE

ORD. PART NO. 7265718

B	1	AISI-C1137 OR EQUAL	1" DIA. X 15"
ITEM	NO. REQD.	NAME	

HARRINGTON & RICHARDSON ARMS CO.
WORCESTER, MASS.

BARREL

MODEL 894 .22 CAL. HORNET SURVIVAL WEAPON

PART NO. BARREL #B		SCALE 1/1-3/4-1/2
DESIGNED BY	DATE	DRAWING NO.
DETAILED BY C.C.B.	DATE FEB. 8, 50	C294-8
TRACED BY	DATE	
CHECKED BY A.S.B.	DATE 2-9-50	
APPVD. BY	DATE	SHEET 1 OF 1 SHEET

2

DO NOT SCALE THIS DRAWING

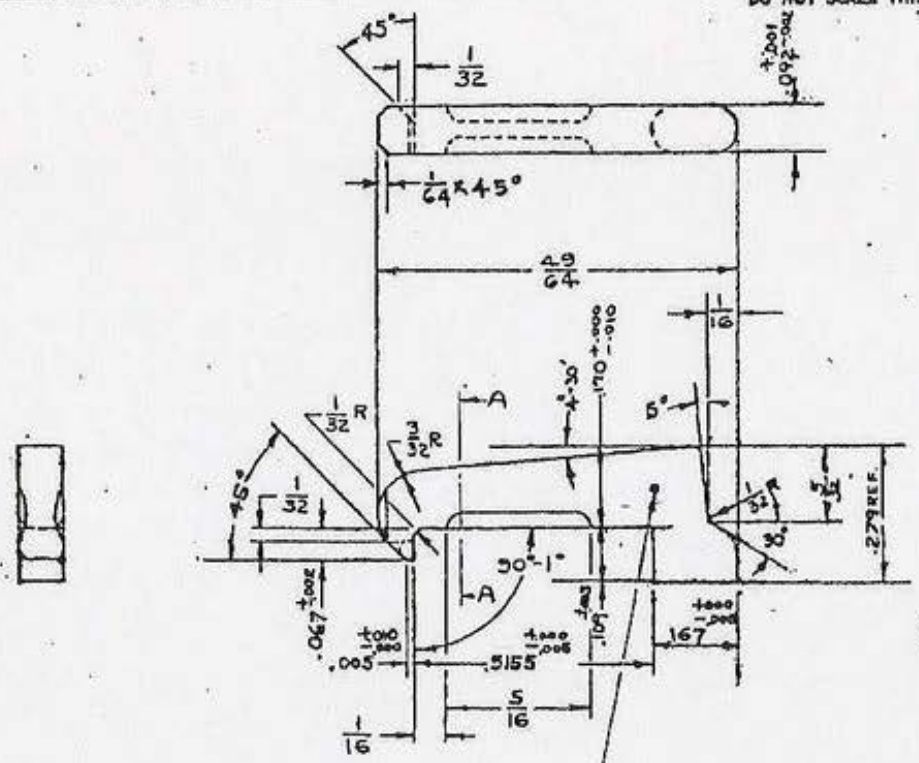

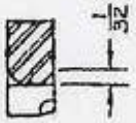

SECTION A-A

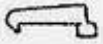

FULL SIZE

PROTECTIVE FINISH
TYPE II CLASS A
U.S.A. 57-0-2

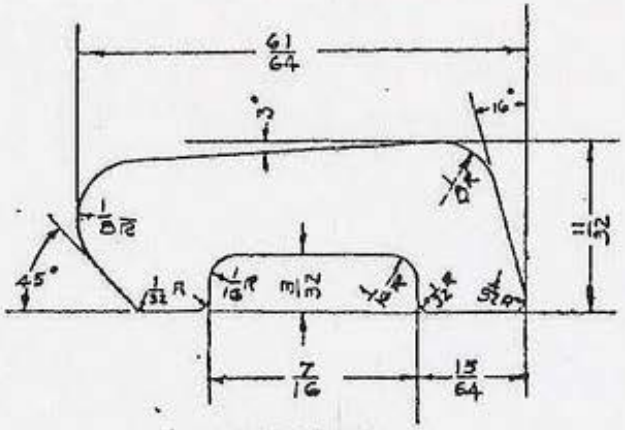

BLANK

± .010 ON ALL BLANK DIMENSIONS

APPROVED PENDING
ORDNANCE DRAWING
LT. COL. E. D. Williams
ORD. CORP
DATE OCT. 19, 1950

REMOVE ALL BURRS, SHARP CORNERS AND EDGES.
ALL SURFACES MUST BE SMOOTH.

HARDEN TO ROCK C-44-48

ORD. PART NO. 7265720

SUBSTITUTE AISI-C1075 (F)			
26	1	AISI-C1065	1/8 x 3/8 x 1 LG
ITEM	NO. REQ.	MATERIAL	SIZE

HARRINGTON & RICHARDSON ARMS CO.
WORCESTER, MASS.

NAME: RE-SING 22 CAL. LONG RIFLE EXTRACTOR

MATERIAL: EXTRACTOR | SCALE 4/1 | OPER.

DRAWN | DATE | CHK. | DATE | APP. | DATE

DRAWING NO. B165-26

G	CLASSIFICATION CANCELLED BY AUTHORITY OF OCM 33331	S.A.	18SEP54
F	3/32 WAS 7/32, ±.010 TOL. ADDED TO BLANK, AISI-SAE	S.A.	1-7-52
E	ADDED: 1/32 R, 1/32, 90°-1°, 1/16, 5/16, 45°, 1/32 & 1/32 x 45° REMOVED: NOTE, 1/32 R, 1/64, 3/16, 45°, & 1/64 x 45°	S.A.	11-23-51
D	NOTE ADDED M 6-20-51	S.A.	11-20-51
C	[illegible]	S.A.	4-11-51
B	PROT. FIN. & ROCK. SPEC. LOC. NOTE ADD'D. NOTE "DRAWN & REMOVED"	S.A.	10-13-50
A	[illegible]		

4

-B

DO NOT SCALE THIS DRAWING

NOTE: THIS POINT TO BE BLANKED SQUARE AND STONED AT ASSEMBLY TO SUIT REQUIRED TRIGGER PULL.

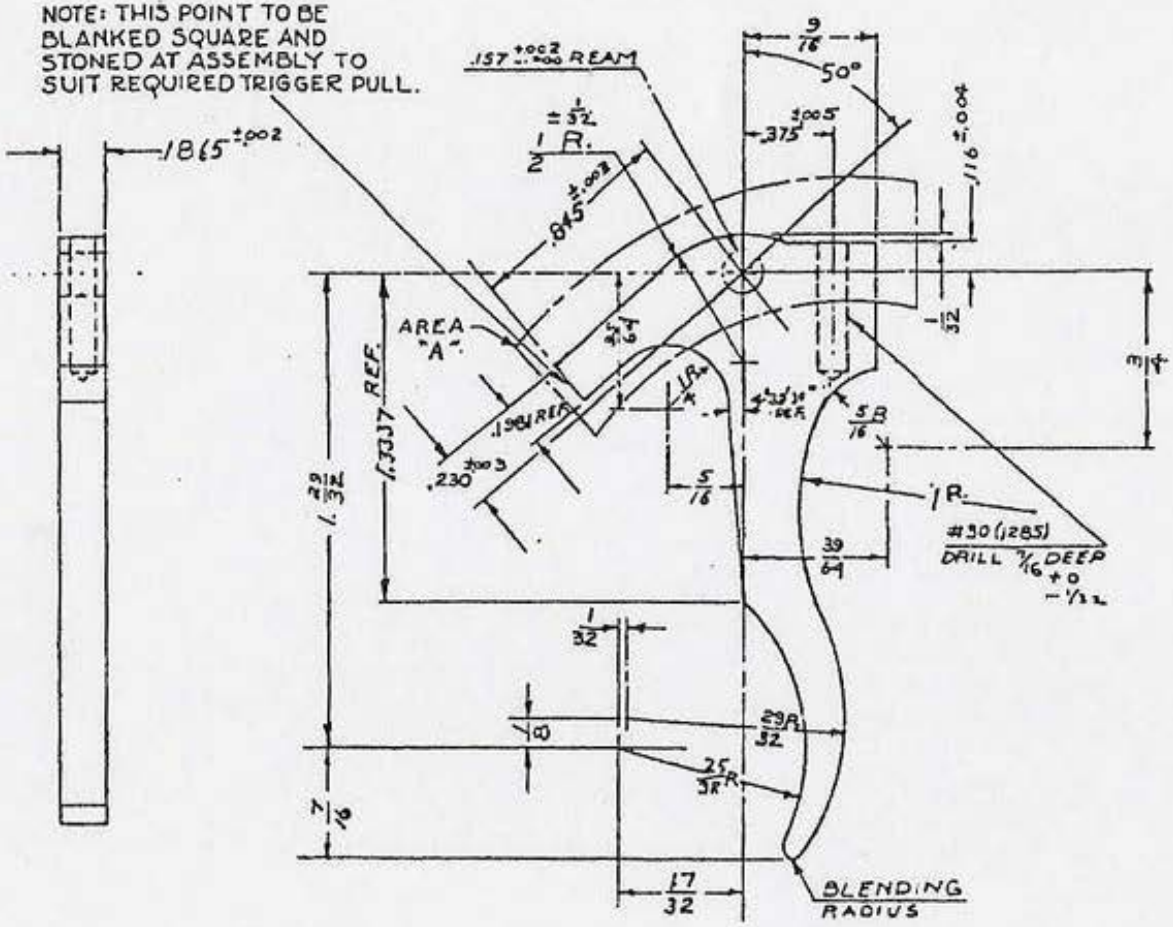

PROTECTIVE FINISH
TYPE II CLASS A
U.S.A. 57-0-2

CORNERS & EDGES IN AREA "A" SHALL BE FREE FROM BURRS BUT SHALL NOT BE ROUNDED TO EXCEED .03R.

ALL OTHER CORNERS AND EDGES SHALL BE FREE FROM BURRS AND BE SLIGHTLY ROUNDED.

APPROVED PENDING
ORDNANCE DRAWING
LT. COL. [illegible]
ORD. DEPT.
DATE MAY 24, 1952

CYANIDE HARDEN

ORD PART NO. 7265721

ITEM	NO. REQ'D.	MATERIAL	SIZE
10	1	SAE 1020	1.875 +.000 -.002 THICK

HARRINGTON & RICHARDSON ARMS CO.
WORCESTER, MASS.

TRIGGER

MODEL 765 .22 CAL. SINGLE SHOT RIFLE

PART & NO. TRIGGER #10. SCALE 2/1 FIGURE NO.

DESIGNED BY | DATE
DETAILED BY C.B. | DATE MAY 10, 48
TRACED BY | DATE
CHECKED BY [illegible] | DATE 6-1-48
APPVD. BY | DATE

DRAWING NO. B-765-10

SHEET OF SHEETS

F	CLASSIFICATION CANCELLED BY AUTHORITY OF OCM 33331	S.A.	15 SEP 54
E	.3525 REMOVED, 7/16 WAS 9/16, .375±.005 WAS .3125±.005, 7/16 APPROX .375±.005 WAS .3125±.005, 1/8 R 5/16 WAS 3/8 R, .245±.005 WAS .245±.005, .250±.005 WAS .250±.005 NOTE ADDED.	S.A.	4-11-51
D	.03R WAS .01R	S.A.	1-2-51
C	ADDED: PROT. FIN, AREA "A" & NOTES, REMOVED: NOTE: BROWN ETC.	S.A.	10-13-50
B	.845 ±.001 WAS .830±.001	V.C.B.	12-12-48
A	9/16 WAS 1/2	TRACED	6-16-48
	REVISIONS	BY	DATE

FRACTIONAL DIMENSIONS ±.005 UNLESS SPECIFIED OTHERWISE

DO NOT SCALE THIS DRAWING

PROTECTIVE FINISH
TYPE II CLASS A
U.S.A. 57-0-2

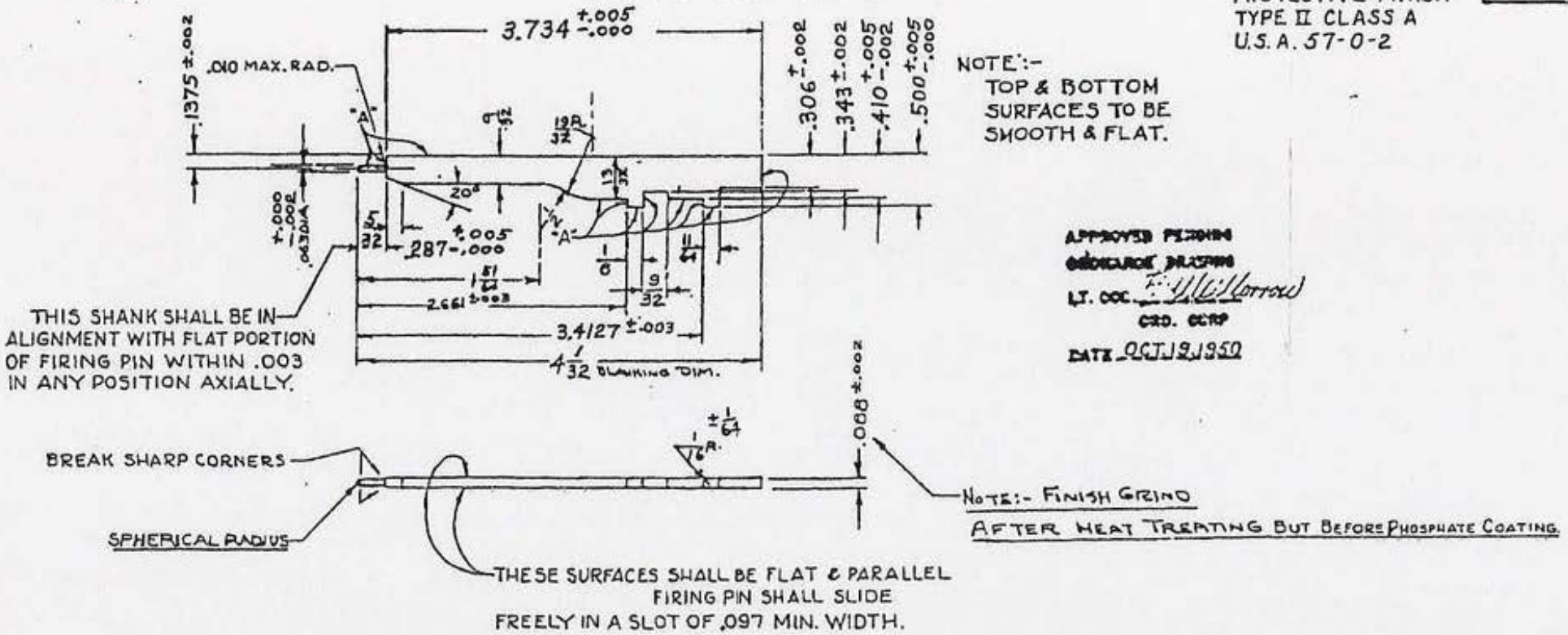

NOTE:-
TOP & BOTTOM SURFACES TO BE SMOOTH & FLAT.

APPROVED FIRING
ORDNANCE INSPECTOR
LT. COL. [illegible]
ORD. CORP
DATE OCT 19, 1950

SPRING STEEL - 60-70 CARBON

HARDEN & TEMPER ROCK. "C" 43-47

REMOVE ALL BURRS, SHARP CORNERS AND EDGES TO PERMIT FREE MOVEMENT IN BOLT. SAND BLAST BEFORE PHOSPHATE COATING.

ALL SURFACES MARKED "A" SHALL BE UNIFORMLY FLAT AND SMOOTH BY REMOVAL OF SHEARED SURFACES.

ORD. PART NO. 7265723

ITEM	NO. REQD.	MATERIAL	SIZE
20	1	SPR. STEEL-60-70 CARB	.093 +.002 THICK

HARRINGTON & RICHARDSON ARMS CO.
WORCESTER, MASS.

FIRING PIN

MODEL 294, .22 CAL. HORNET SURVIVAL WEAPON

PART & NO. FIRING PIN #20		SCALE FULL	OPER. NO.
DESIGNED BY	DATE	DRAWING NO.	
DETAILED BY V.C.B.	DATE 2-10-50	B-294-20	
TRACED BY	DATE		
CHECKED BY A.S.B.	DATE 2-14-50		
APPVD. BY	DATE	SHEET OF SHEETS	

D	REMOVED, "WITHIN ±.003"	S.A.	1-2-51				
C	PROT. FINISH & NOTES ADDED; © RC. 43-47 WAS 45	S.A.	10-13-50				
B	[illegible]	[illegible]	8-22-50				
A	NOTE ADDED	[illegible]	[illegible]	G	CLASSIFICATION CANCELLED BY AUTHORITY OF OCM 33331	S.A.	25 SEP 54
	REVISIONS	BY	DATE	F	[illegible]	S.A.	4-11-51
FRACTIONAL DIMENSIONS ± .005 UNLESS SPECIFIED OTHERWISE				E	[illegible]	J.A.	3-12-51

A-265-171

DO NOT SCALE THIS DRAWING

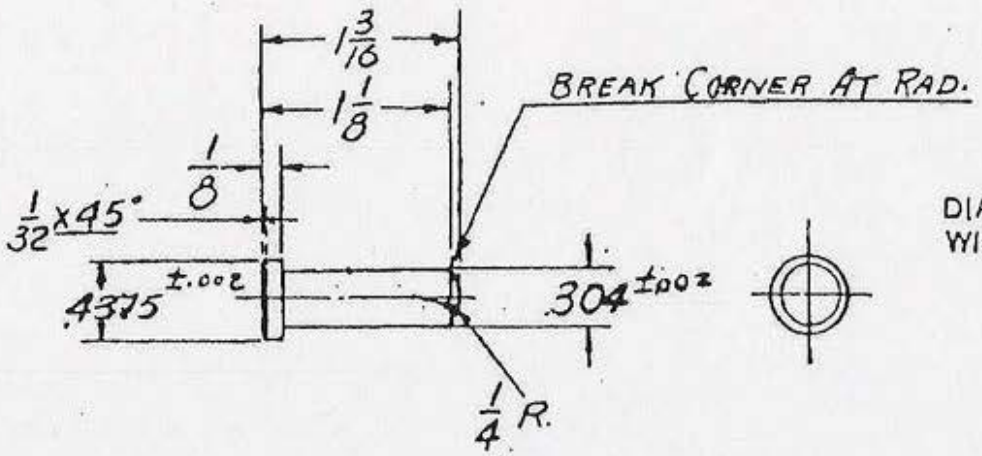

PROTECTIVE FINISH
TYPE II CLASS A
U.S.A. 57-0-2

DIAMETERS SHALL BE CONCENTRIC WITHIN .008 INDICATOR READING.

CYANIDE HDN.

APPROVED PENDING
ORDNANCE DRAWING
LT. COL. F. Dillingham
ORD. DEPT.
DATE MAY 24, 1950

ORD PART NO. 7265725

ITEM	NO. REQ.	MATERIAL	SIZE
		AISI - B1113	ALTERNATE
171	1	AISI - C1020	.4375 DIA. x 1 5/16

HARRINGTON & RICHARDSON ARMS CO.
WORCESTER, MASS.

NAME REISING 22 CAL. BOLT ACTION RIFLE MOD. 265 MAINSPRING PLUNGER (REPEATER)

PART & NO. MAINSPRING PLUNGER A-265-171 | SCALE FULL | DATE

DRAWN BY | DATE
DETAILED BY | DATE
TRACED BY | DATE
CHECKED BY | DATE
APPD. BY | DATE

DRAWING NO. A 265-171

SHEET 1 OF 1

E	CLASSIFICATION CANCELLED BY AUTHORITY OF OCM 38331	S.A.	5 SEP 54
D	AISI C1020 WAS SAE-1020 ALTERNATE MAT ADDED	S.A.	1-7-52
C	.008 WAS .004	S.A.	1-8-52
B	ADDED, PROTECTIVE FINISH & NOTE	S.A.	10-15-51
A	DIMENSIONS WAS 265 [illegible]	[illegible]	[illegible]
	[illegible]	BY	DATE

FUNCTIONAL DIMENSIONS ±.005 OTHER DIMENSIONS ±

A-265-22

DO NOT SCALE THIS DRAWING

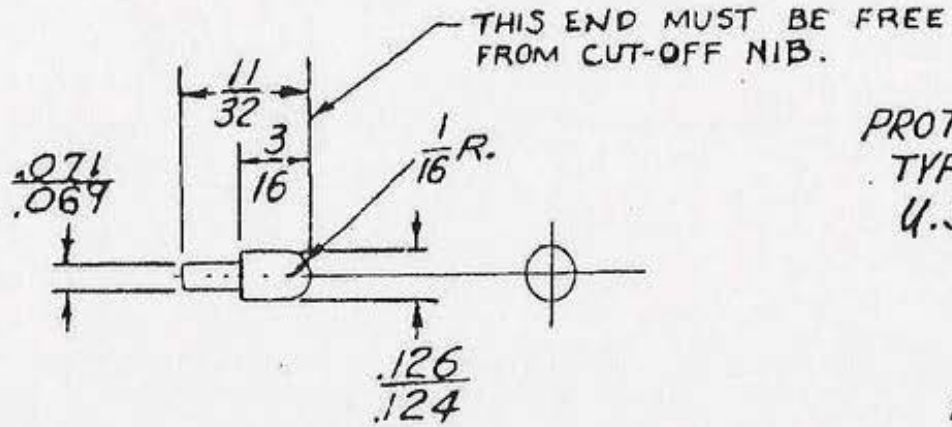

PROTECTIVE FINISH
TYPE II CLASS A
U.S.A. 57-0-2

APPROVED PENDING
ORDNANCE DRAWING
LT. COL. F. J. McMorrow
ORD. DEPT.
DATE MAY 24, 1950

-- REMOVE ALL BURRS.

CYANIDE HARDEN

ORD PART NO. 7265726

SUBSTITUTE B-1112			
22	1	S.A.E. 1020	.125 DIA. X 13/32
ITEM	NO. REQ.	MATERIAL	SIZE

HARRINGTON & RICHARDSON ARMS CO.
WORCESTER, MASS.

NAME REISING 22 CAL. BOLT-ACTION RIFLE MOD. 265 TRIGGER SPRING PLUNG. (REPEATER)

PART & NO. TRIGG. SPR. PLUNG. A-265-22 | SCALE 2:1 | OPER. NO.

DRAWN BY | DATE
DETAILED BY G. TICK | DATE 1-17-45
TRACED BY | DATE
CHECKED BY G. TICK | DATE 8-31-45
APPRD. BY | DATE

DRAWG. NO. A-265-22

SHEET 1 OF 1 SHEETS

E1	CLASSIFICATION CANCELLED BY AUTHORITY OF OCM 33331	S.A.	5SEP54
D	ADDED, PROTECTIVE FINISH	S.A.	10-13-50
C	.069-.071 WAS .070-.072	[illegible]	10-4-50
B	SUBSTITUTE B-1112 ADDED	[illegible]	4-5-50
A	ADDED NOTES	[illegible]	3-15-49
	REVISIONS	BY	DATE

FRACTIONAL DIMENSIONS ±.005 DECIMAL DIMENSIONS ±

A-265-14

DO NOT SCALE THIS DRAWING

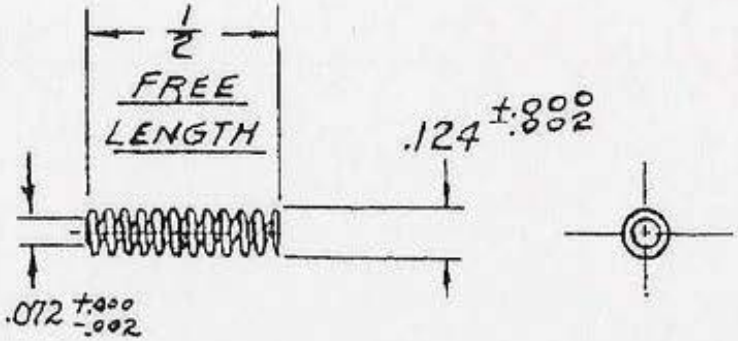

APPROVED PENDING
ORDNANCE DRAWING
LT. COL. [illegible]
ORD. DEPT.
DATE MAY 24, 1950

12 - COILS

.026 DIA. WIRE

CLOSE BOTH ENDS & GRIND

ORD PART NO. 7265728

SPRING TEMPER

SET BEFORE TEMPERING

ITEM	NO. REQ.	MATERIAL	SIZE
14	1	SPRING WIRE	.026 DIA.

HARRINGTON & RICHARDSON ARMS CO.
WORCESTER, MASS.

NAME REISING 22 CAL. BOLT-ACTION RIFLE
MOD. 265 TRIGGER SPRING (REPEATER)

PART & NO.	SCALE	OPER. NO.
TRIGGER SPRING A-265-14	2:1	

DESIGN BY		DATE	
DETAILED BY	C.T.C.	DATE	3-21-45
TRACED BY	E.G.W.	DATE	
CHECKED BY	[illegible]	DATE	6-23-45
APPD. BY		DATE	

DRAWING NO. A-265-14

SHEET 1 OF 1 SHEETS

D			
C			
B	CLASSIFICATION CANCELLED BY AUTHORITY OF OCR 33331	S.A.	15 SEP 56
A	ADDED	[illegible]	[illegible]
	REVISIONS	BY	DATE

FRACTIONAL DIMENSIONS ± .005 DECIMAL DIMENSIONS ±

A-294-270

DO NOT SCALE THIS DRAWING

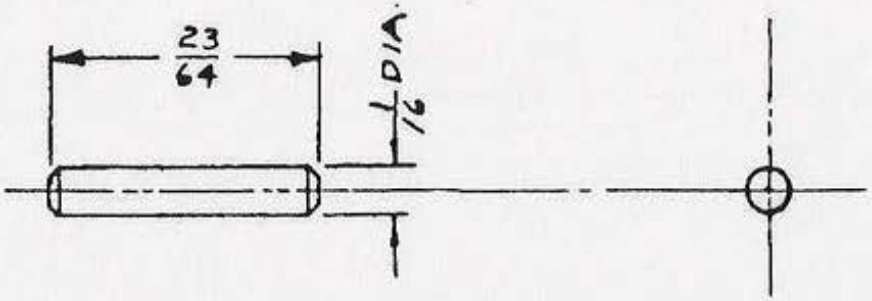

FULL SCALE

PROTECTIVE FINISH
TYPE II CLASS A
AT ASSY 7265765

APPROVED PENDING
ORDNANCE DRAWING
LT. COL. F. J. Mellorson
ORD. DEPT.
DATE MAY 24, 1950

COMMERCIAL TOL.

ORD PART NO. 7265729 $^{+.000}_{-.008}$

ITEM	NO. REQD.	MATERIAL	SIZE
270	1	B-1113	.0625 DIA.

HARRINGTON & RICHARDSON ARMS CO.
WORCESTER, MASS.

BOLT HANDLE PIN

MODEL 294 .22 CAL. HORNET SURVIVAL WEAPON

PART & NO. BOLT HANDLE PIN #270		SCALE 4/1	OPER. NO.
DESIGNED BY	DATE	DRAWING NO.	
DETAILED BY V.C.B.	DATE FEB. 13, 50	A-294-270	
TRACED BY	DATE		
CHECKED BY	DATE 2-14-50		
APPVD. BY	DATE	SHEET OF SHEETS	

	REVISIONS	BY	DATE
C			
B	CLASSIFICATION CANCELLED BY AUTHORITY OF OCM 33331	S.A	25SEP54
A	ADDED, PROTECTIVE FINISH	S.A.	10-13-50

FRACTIONAL DIMENSIONS ± .005 UNLESS SPECIFIED OTHERWISE

A-265-167

DO NOT SCALE THIS DRAWING

THIS SURFACE SHALL BE SMOOTH & SQUARE WITH BORE.

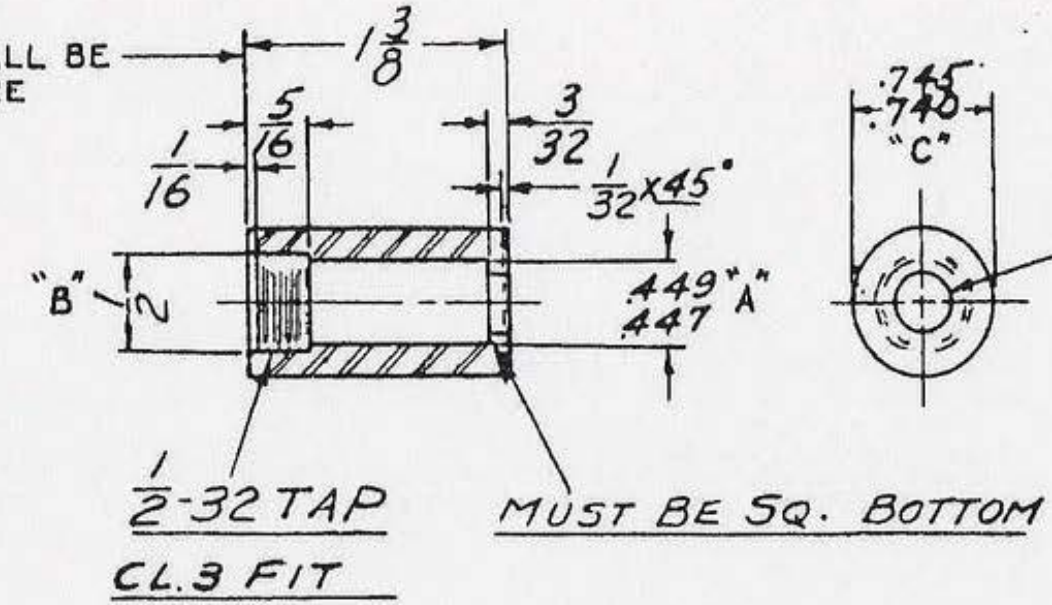

PROTECTIVE FINISH
TYPE II CLASS A
U.S.A. 57-0-2

DIMENSION "A" & "B" SHALL BE CONCENTRIC WITH DIM. "C" WITHIN .008 INDICATOR READING.

APPROVED PENDING
ORDNANCE DRAWING
LT. COL. F. Hillemann
ORD. DEPT.
DATE MAY. 24 1950

ORD PART NO. 7265730

E	CLASSIFICATION CANCELLED BY AUTHORITY OF OCM 33331	S.A.	5SEP54	167	1	S.A.E. 1020	.745/.740 DIA. x 1½
				ITEM	NO. REQ.	MATERIAL	SIZE

HARRINGTON & RICHARDSON ARMS CO.
WORCESTER, MASS.

NAME REISING 22 CAL. BOLT-ACTION RIFLE
MOD. 265 - SPRING HOUSING (REPEATER)

PART & NO. SPRING HOUSING #167 | SCALE FULL | OPER. NO.

D	.008 WAS .004	S.A.	1-2-51	DESIGN BY	DATE
C	ADDED, PROTECTIVE FINISH & NOTES.	S.A.	10-8-6	DETAILED BY C.T.	DATE 1-16-45
B	.740-.745 WAS .750±.001	[illegible]	[illegible]	TRACED BY	DATE
A	.3125±.003 DIA HOLE WAS [illegible] DIA HOLE	[illegible]	[illegible]	CHECKED BY [illegible]	DATE 6-22-45
	REVISIONS	BY	DATE	APPR. BY	DATE

DRAWG. NO. A-265-167

FRACTIONAL DIMENSIONS ±.005 DECIMAL DIMENSIONS

SHEET 1 OF 2 SHEETS

DO NOT SCALE THIS DRAWING

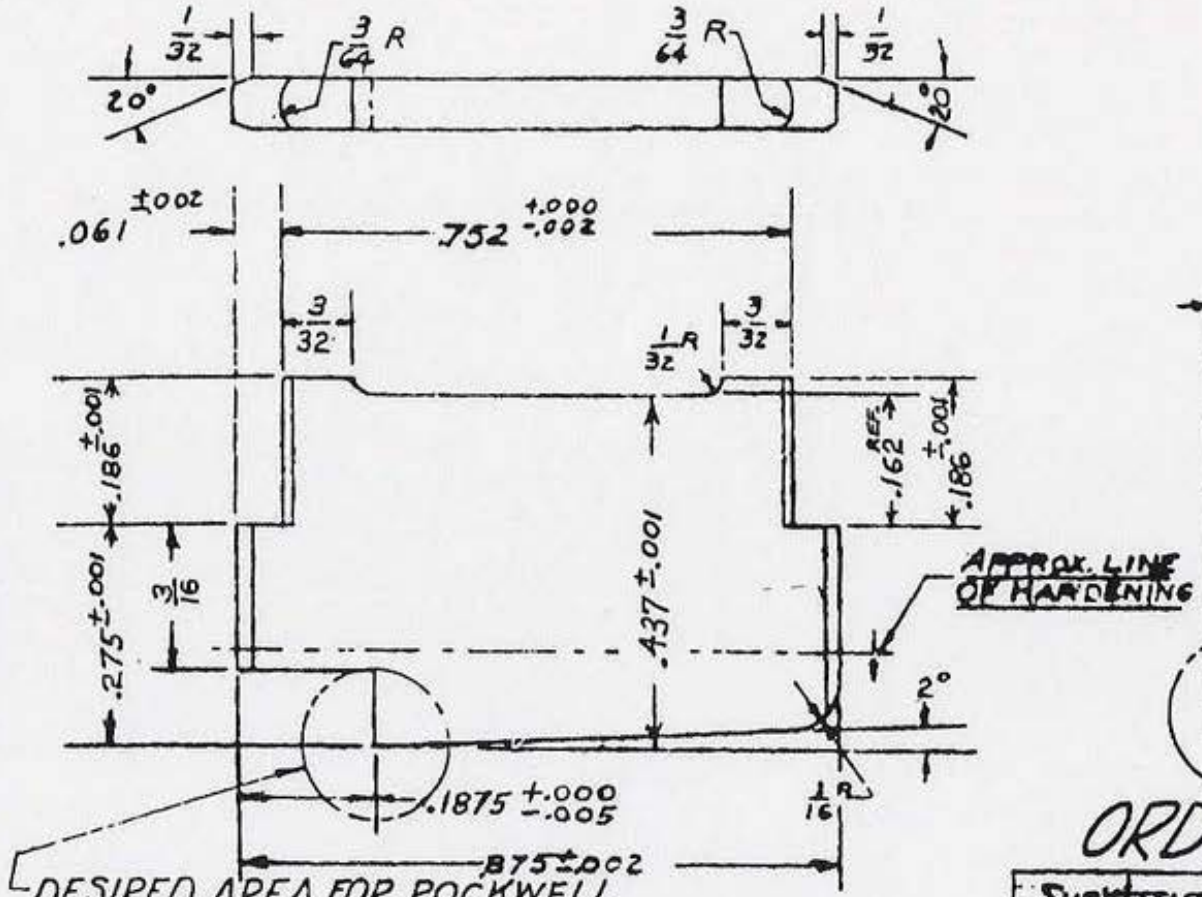

INDUCTION HARDEN CAUSTIC QUENCH
HARDEN ROCKWELL 'C' SCALE 40-46
BY H&R. ARMS CO.

PROTECTIVE FINISH
TYPE II CLASS A
AT ASSY. 7265769

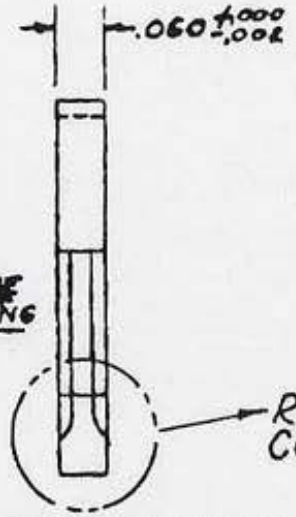

APPROVED PENDING
ORDNANCE DRAWING
LT. COL. F. Callaway
ORD. DEPT.
DATE MAY 29, 1950

REMOVE ALL BURRS, SHARP CORNERS & EDGES.

ORD PART NO. 7265731

SUBSTITUTE		SAE 1018 OR SAE 1025	
21	1	SAE 1045	.065 +.000 -.002 x 5/16
ITEM	NO. REQ.	MATERIAL	SIZE

HARRINGTON & RICHARDSON ARMS CO.
WORCESTER, MASS.

NAME REISING .22 CAL. LONG RIFLE
MOD. 165 EJECTOR

PART & NO. EJECTOR-21		SCALE 4/1	OPER. NO
DESIGN BY	DATE	DRAWG. NO.	
DETAILED BY	DATE NOV 18 1949	A-165-21	
TRACED BY	DATE		
CHECKED BY	DATE NOV. 26, 1949		
APPVD. BY	DATE	SHEET OF SHEETS	

	REVISIONS	BY	DATE
D			
C			
B	CLASSIFICATION CANCELLED BY AUTHORITY OF OCM 33251	S.A.	18SEP5
A	ADDED, PROTECTIVE FINISH & NOTE; (A) NOTE ADDED	S.A.	11-8-50

PRACTICAL DIMENSIONS ±.005 DECIMAL DIMENSIONS ±

DO NOT SCALE THIS DRAWING

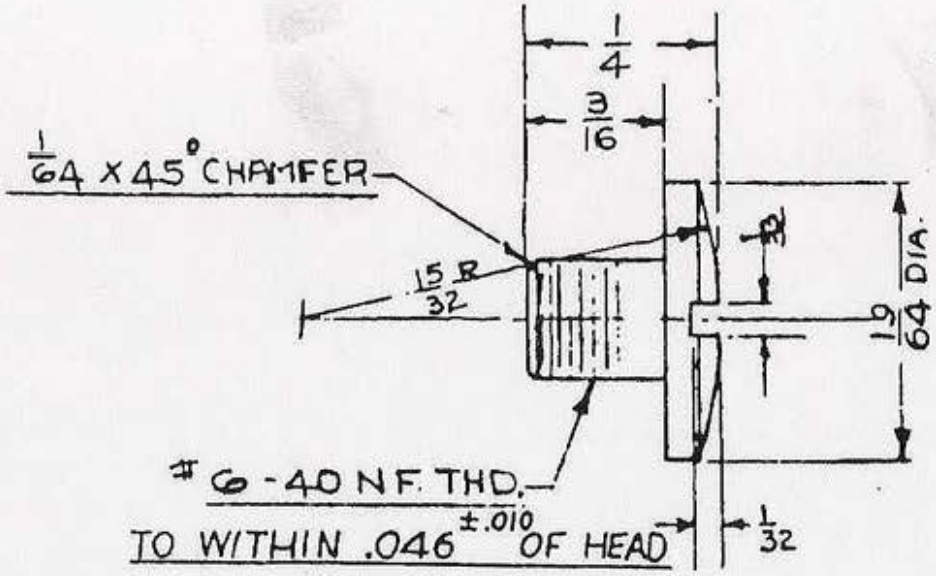

PROTECTIVE FINISH
TYPE II CLASS A
U.S.A. 57-0-2

APPROVED PENDING
ORDNANCE DRAWING
LT. COL. [illegible]
ORD. DEPT.
DATE MAY 24, 1950

NO HEAT TREATMENT REQUIRED.

BREAK SHARP CORNER .010 MAX.

ORD PART NO. 7265732

ITEM	NO. REQ.	MATERIAL	SIZE
57	1	AISI. B-1112	

HARRINGTON & RICHARDSON ARMS CO.
WORCESTER, MASS.

NAME REISING .22 CAL. LONG RIFLE
MOD. 165 MAGAZINE CATCH SCREW

PART & NO. MAGAZINE CATCH SCREW | SCALE 5/1 | OPER. NO.

DESIGN BY | DATE
DETAILED BY [illegible] | DATE NOV. 20, 1945
TRACED BY | DATE
CHECKED BY C.A.K. | DATE 12-4-45
APPVD. BY [illegible] | DATE [illegible] 20, 1946

DRAWG. NO. A-165-57

SHEET OF SHEETS

D	[illegible]		
C	CLASSIFICATION CANCELLED BY AUTHORITY OF DCM 23551	S.A.	16 SEP 54
B	ADDED NOTES, REMOVED DIMEN'S 1/64 & 1/64 X .002 DIA, CHANGED .285 TO 18/64, SAE 1112 TO AISI B-1112	S.A.	1-7-62
A	ADDED, PROTECTIVE FINISH: REMOVED PARKERIZED	S.A.	10-18-50
	1/4 WAS 7/32, 3/16 WAS 5/32 REVISIONS	BY	DATE

FRACTIONAL DIMENSIONS ± .005 DECIMAL DIMENSIONS ±

A-265-137

DO NOT SCALE THIS DRAWING

MAY BE PURCHASED HARDENED & PHOSPHATE COATED.

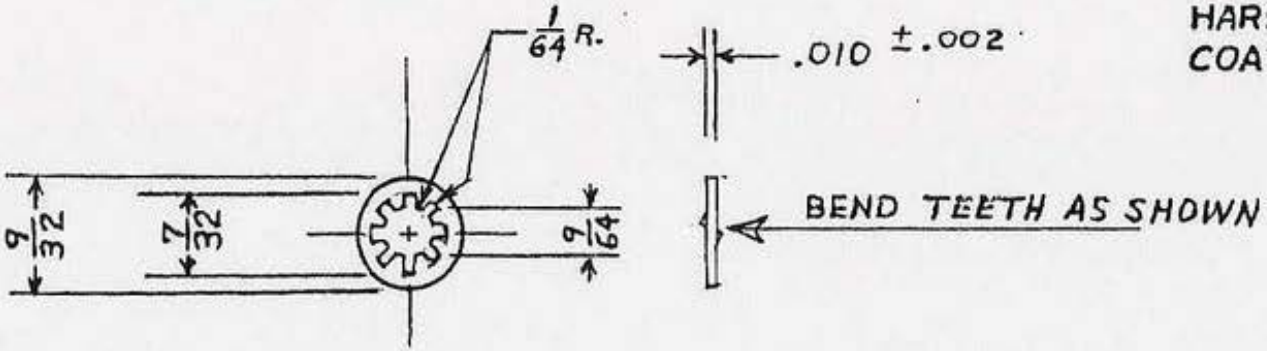

ORDNANCE DRAWING
LT. COL. [illegible]
ORD. DEPT.
DATE MAY 24, 1950

SHAKEPROOF

COMMERCIAL TO FIT #6 SCREW

(A) SAME AS ORD. STD. BEAXI
PART NO. 138528

PROTECTIVE FINISH
TYPE II CLASS A U.S.A. 57-0-2

ORD PART NO. 7265738
SAME AS SA22-137 MOD. 65

ITEM	NO. REQ.	MATERIAL	SIZE
137	1	SPRING STEEL	.018 THICK

HARRINGTON & RICHARDSON ARMS CO.
WORCESTER, MASS.

NAME. REISING 22 CAL. BOLT ACTION RIFLE (REPEATER)
MOD 265 - LOCKWASHER (MAG. CATCH SPRING SCREW)

PART & NO. LOCKWASHER A-265-137 | SCALE 2/1 | OPER. NO.

DESIGN BY | DATE
DETAILED BY A.D.H. | DATE 4-27-45
TRACED BY | DATE
CHECKED BY G.T.D. | DATE 6-22-45
APPRD. BY | DATE

DRAWG. NO. A-265-137

SHEET 1 OF 1 SHEETS

D			
C	SEE NOTE ABOVE	S.A.	[illegible]
B			
A	NOTE & PROT. FIN. ADDED. NOTES: BLUED & NO H.T. REMOVED	S.A.	[illegible]
	REVISIONS	BY	DATE

FRACTIONAL DIMENSIONS ±.005 DECIMAL DIMENSIONS ±

A-294-210

DO NOT SCALE THIS DRAWING

REMOVE ALL BURRS, SHARP CORNERS & EDGES TO PREVENT INJURY TO FINGERS.

PROTECTIVE FINISH
TYPE II CLASS A
U.S.A. 57-0-2

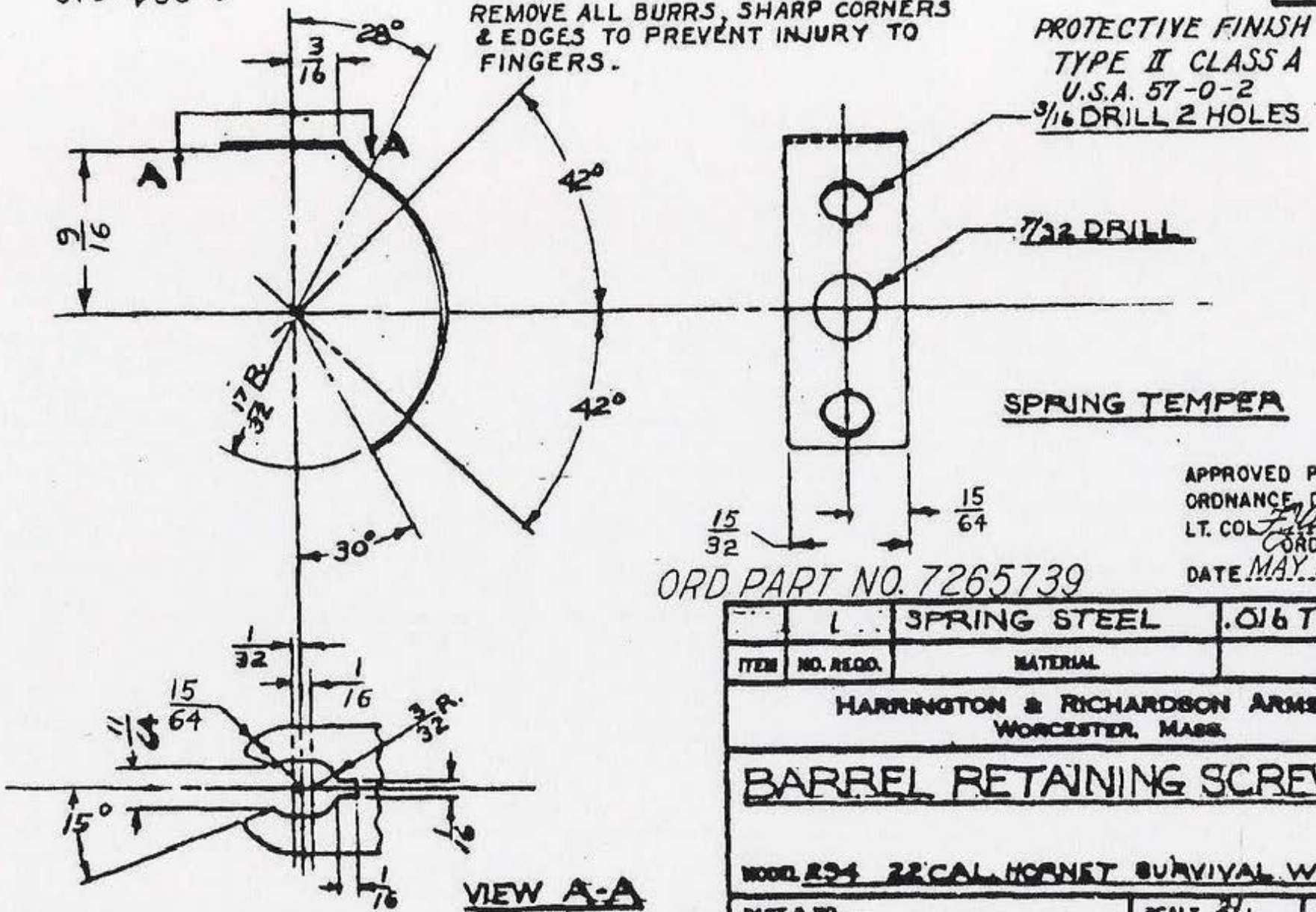

SPRING TEMPER

APPROVED PENDING ORDNANCE DRAWING
LT. COL. F. Wellmond
ORD. DEPT.
DATE MAY 24 1950

ORD PART NO. 7265739

ITEM	NO. REQD.	MATERIAL	SIZE
	1	SPRING STEEL	.016 THICK

HARRINGTON & RICHARDSON ARMS CO.
WORCESTER, MASS.

BARREL RETAINING SCREW SPRING

MODEL 294 22 CAL. HORNET SURVIVAL WEAPON

PART & NO.		SCALE 2/1	OPER. NO.
DESIGNED BY	DATE	DRAWING NO.	
DETAILED BY V.C.B.	DATE 1-25-50	A-294-210	
TRACED BY EGW	DATE		
CHECKED BY A.S.F.	DATE 1-25-50		
APPVD. BY	DATE	SHEET OF SHEETS	

	REVISIONS	BY	DATE
C	CLASSIFICATION CANCELLED BY AUTHORITY OF OCM 33331	S.A.	15SEP54
B	1/32 WAS 1/16	S.A.	1-2-51
A	1/16 WAS 1/32, ADDED; PROTECTIVE FINISH NOTE	S.A.	10-13-50

FRACTIONAL DIMENSIONS ± .005 UNLESS SPECIFIED OTHERWISE

A-765-31

DO NOT SCALE THIS DRAWING

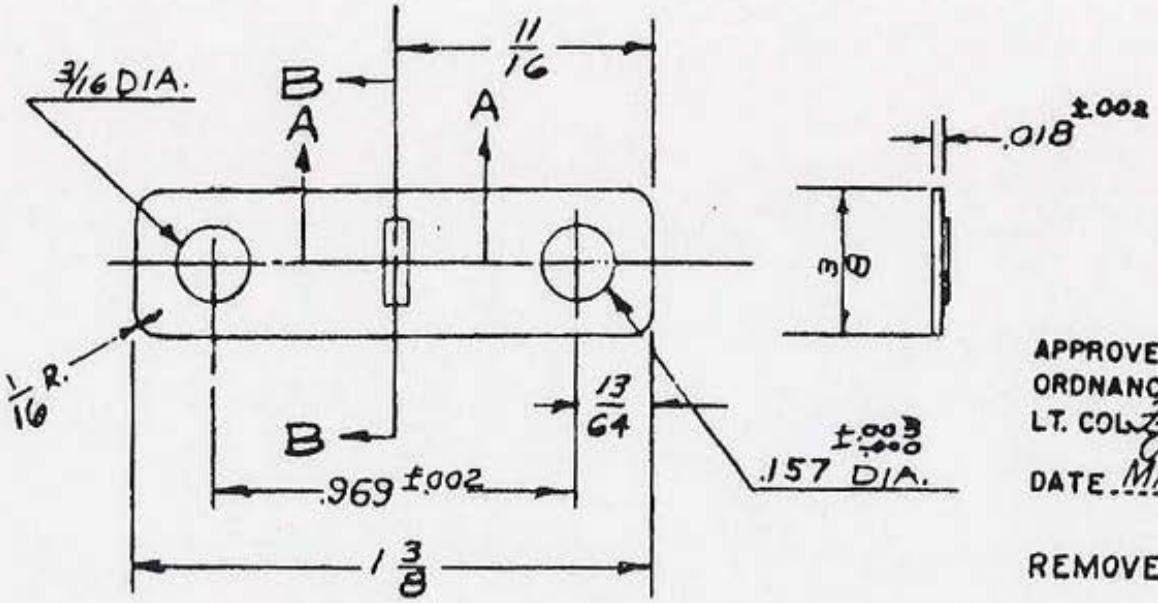

PROTECTIVE FINISH
TYPE II CLASS A
U.S.A. 57-0-2

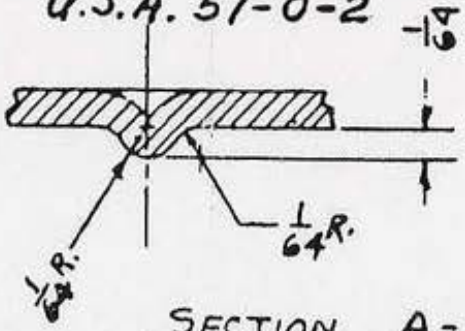

SECTION A-A
SCALE 10:1

APPROVED PENDING
ORDNANCE DRAWING
LT. COL. F. Williams
ORD. DEPT.
DATE MAY 24 1950

REMOVE ALL BURRS & SHARP EDGES.

SPRING TEMPER

ORD PART NO. 7265740

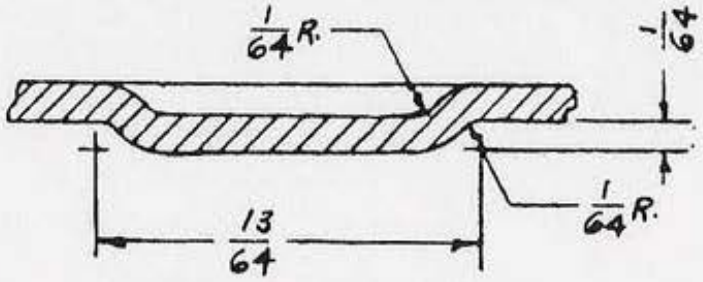

SECTION B-B
SCALE 10:1

ITEM	NO. REQ'D.	MATERIAL	SIZE
31	1	SPRING STEEL	

HARRINGTON & RICHARDSON ARMS CO.
WORCESTER, MASS.

SAFETY LEVER SPRING

MODEL #765

SUPERCEDES DWG. SAME NO. DATED MAY. 15-48

PART & NO. SAFETY LEVER SPR.	SCALE 2:1	OPER. NO. ~	
DESIGNED BY	DATE	DRAWING NO.	
DETAILED BY	DATE NOV. 17, 48	A-765-31	
TRACED BY EGW	DATE		
CHECKED BY V.C.B	DATE NOV. 17, 48		
APPVD. BY	DATE	SHEET 1 OF 1 SHEETS	

	REVISIONS	BY	DATE
C	.018 ±.002 WAS .018	S.A	1-7-52
B	ADDED, PROTECTIVE FINISH & NOTE; .969 ±.002 WAS 31/32	S.A.	10-13-50
A	.157 +.003 -.000 DIA. WAS 3/16 DIA.	V.C.B	NOV. 29 48

FRACTIONAL DIMENSIONS ± .005 UNLESS SPECIFIED OTHERWISE

DO NOT SCALE THIS DRAWING

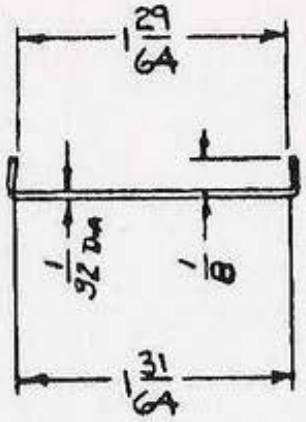

APPROVED PENDING
ORDNANCE DRAWING
LT. COL. [illegible]
ORD. DEPT.
DATE MAY 24 1950

ORD PART NO. 7265742

ITEM	NO. REQD.	MATERIAL	SIZE
	2	SILVER SOLDER	.031 +.005 DIA.

HARRINGTON & RICHARDSON ARMS CO.
WORCESTER, MASS.

SILVER SOLDER CLIP

.22 CAL. HORNET SURVIVAL WEAPON

MODEL 294

PART & NO. SILVER SOLDER CLIP 190	SCALE FULL	OPER. NO. ~	
DESIGNED BY	DATE	DRAWING NO.	
DETAILED BY R.S.B.	DATE 1-11-50	A-294-190	
TRACED BY	DATE		
CHECKED BY V. C. B.	DATE 1-11-50		
APPVD. BY	DATE	SHEET OF SHEETS	

REVISIONS	BY	DATE
CLASSIFICATION CANCELLED BY AUTHORITY OF OCM 33331	S.A.	15 SEP 54

FRACTIONAL DIMENSIONS ± .005 UNLESS SPECIFIED OTHERWISE

DO NOT SCALE THIS DRAWING

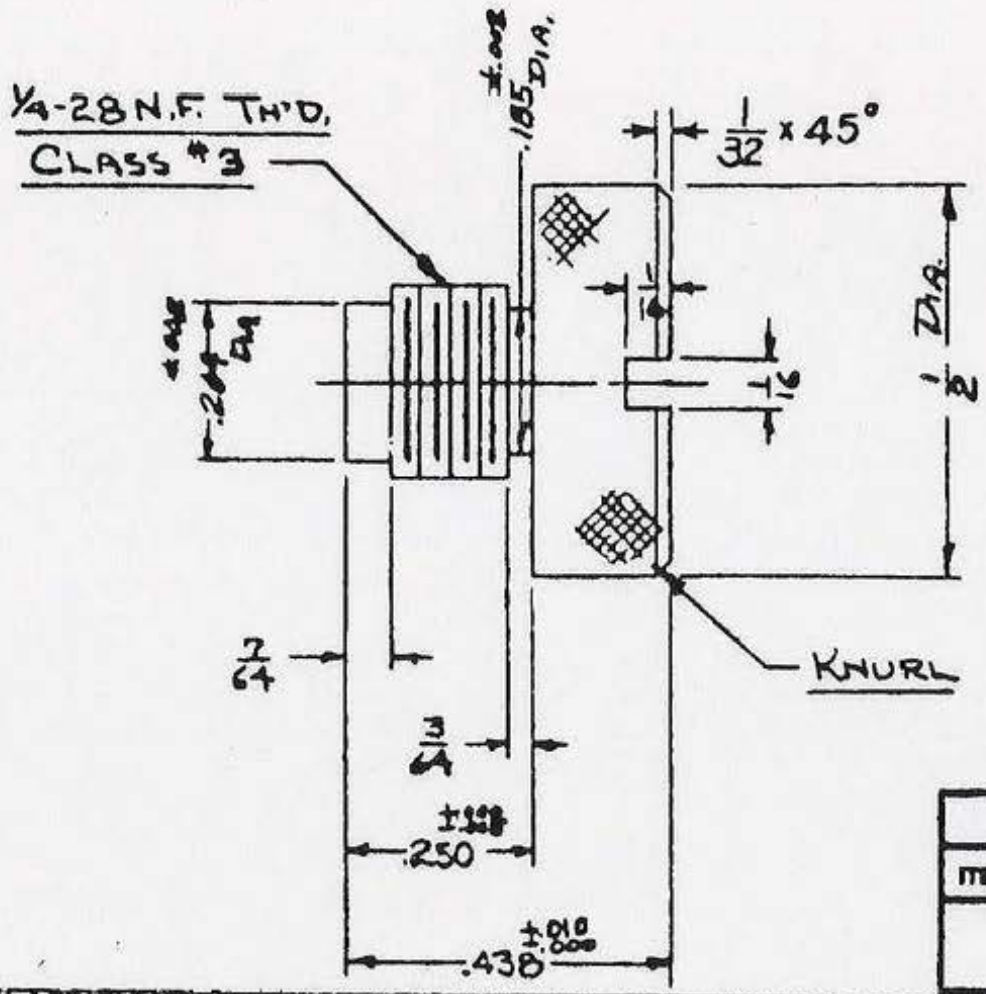

PROTECTIVE FINISH
TYPE II CLASS A
U.S.A. 57-0-2

APPROVED PENDING
ORDNANCE DRAWING
LT. COL. F. W. Morrow
ORD. DEPT.
DATE MAY 24 1950

ORD PART NO. 7265744

ITEM	NO. REQD.	MATERIAL	SIZE
	1	A.I.S.I - B1113 ©	

HARRINGTON & RICHARDSON ARMS CO.
WORCESTER, MASS.

BOLT STOP SCREW

.22 CAL. HORNET SURVIVAL WEAPON

MODEL 29A

D	CLASSIFICATION CANCELLED BY AUTHORITY OF OCM 33331	S.A.	15SEP54
C	ADDED CHAMFER, A.I.S.I-B1113 WAS B1113.	J.A.	1-7-52
B	ADDED, PROTECTIVE FINISH	S.A.	10-12-50
A	7/64 WAS 1/16	TRING	9-3-50
	REVISIONS	BY	DATE

PART & NO.		SCALE	OPER. NO.
DESIGNED BY	DATE	DRAWING NO.	
DETAILED BY A.S.B.	DATE 2-8-50	A-294-115	
TRACED BY	DATE		
CHECKED BY V.C.B.	DATE FEB. 8-50		
APPVD. BY	DATE	SHEET 1 OF 1 SHEETS	

FRACTIONAL DIMENSIONS ± .005 UNLESS SPECIFIED OTHERWISE

DO NOT SCALE THIS DRAWING

PROTECTIVE FINISH
TYPE II CLASS A
AT ASSEMBLY 7265775

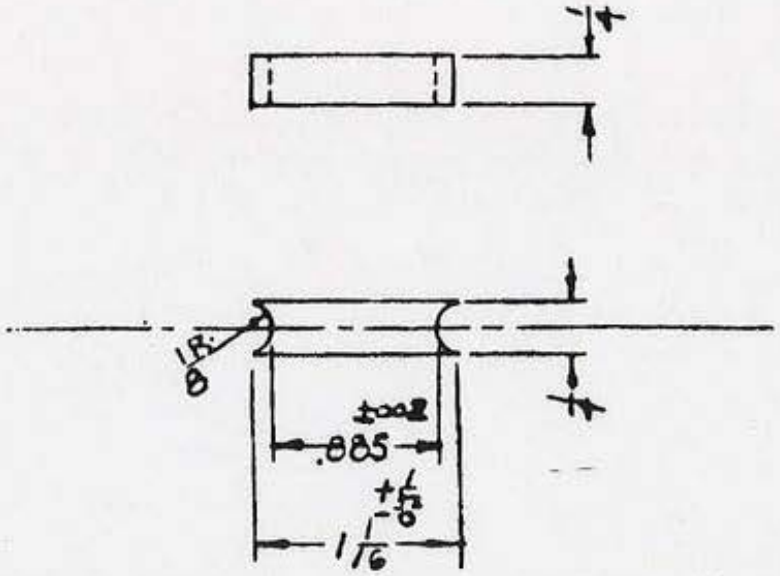

ORD. PART NO. 7265745

ITEM	NO. REQD.	MATERIAL	SIZE
300	1	1020	1/4 SQ.

HARRINGTON & RICHARDSON ARMS CO.
WORCESTER, MASS.

SHOULDER BRACE BLOCK

MODEL 294 - 22 CAL. HORNET SURVIVAL WEAPON

PART & NO. SHOULDER BRACE BLOCK | SCALE FULL | OPER. NO.

APPROVED PENDING
ORDNANCE DRAWING
LT. COL. F. L. McMorrow
ORD. CORP
DATE OCT. 19, 1950

	REVISIONS	BY	DATE
C	CLASSIFICATION CANCELLED BY AUTHORITY OF OCM 33331	S.A.	15 SEP 54
B	PROTECTIVE FINISH ADDED.	S.A.	10-13-50
A	1 1/16 ±.002 WAS 1 1/16, .885 WAS .875	RINK	8-14-50

DESIGNED BY	DATE
DETAILED BY V.C.B.	DATE FEB 23, 50
TRACED BY	DATE
CHECKED BY A.S.R.	DATE 2-20-50
APPVD. BY	DATE

DRAWING NO.
A-294-300

SHEET / OF / SHEETS

FRACTIONAL DIMENSIONS ± .005 UNLESS SPECIFIED OTHERWISE

DO NOT SCALE THIS DRAWING

PROTECTIVE FINISH
TYPE II CLASS A
AT ASSEMBLY 7265775

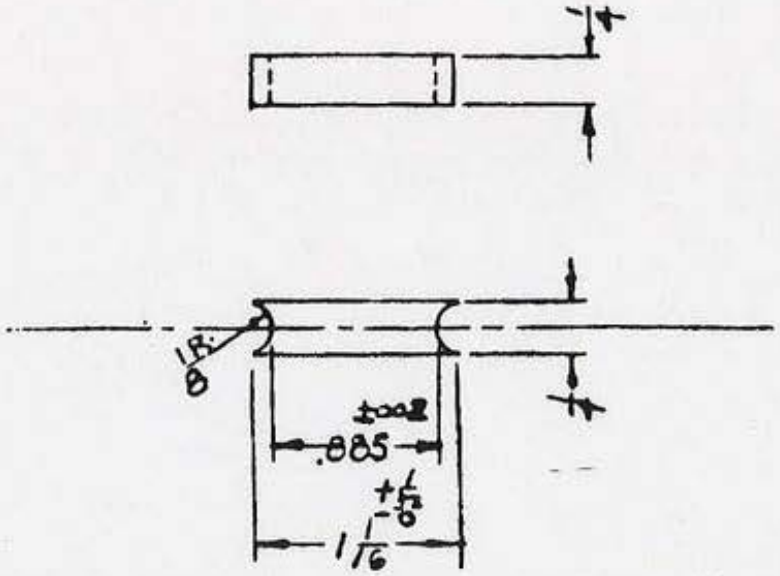

ORD. PART NO. 7265745

ITEM	NO. REQD.	MATERIAL	SIZE
300	1	1020	1/4 SQ.

HARRINGTON & RICHARDSON ARMS CO.
WORCESTER, MASS.

SHOULDER BRACE BLOCK

MODEL 294 - 22 CAL. HORNET SURVIVAL WEAPON

PART & NO. SHOULDER BRACE BLOCK | SCALE FULL | OPER. NO.

APPROVED PENDING
ORDNANCE DRAWING
LT. COL. F. L. McMorrow
ORD. CORP
DATE OCT. 19, 1950

	REVISIONS	BY	DATE
C	CLASSIFICATION CANCELLED BY AUTHORITY OF OCM 33331	S.A.	15 SEP 54
B	PROTECTIVE FINISH ADDED.	S.A.	10-13-50
A	1 1/16 ±.002 WAS 1 1/16, .885 WAS .875	RINK	8-14-50

DESIGNED BY	DATE
DETAILED BY V.C.B.	DATE FEB 23, 50
TRACED BY	DATE
CHECKED BY A.S.R.	DATE 2-20-50
APPVD. BY	DATE

DRAWING NO.
A-294-300

SHEET / OF / SHEETS

FRACTIONAL DIMENSIONS ± .005 UNLESS SPECIFIED OTHERWISE

A-294-320

DO NOT SCALE THIS DRAWING

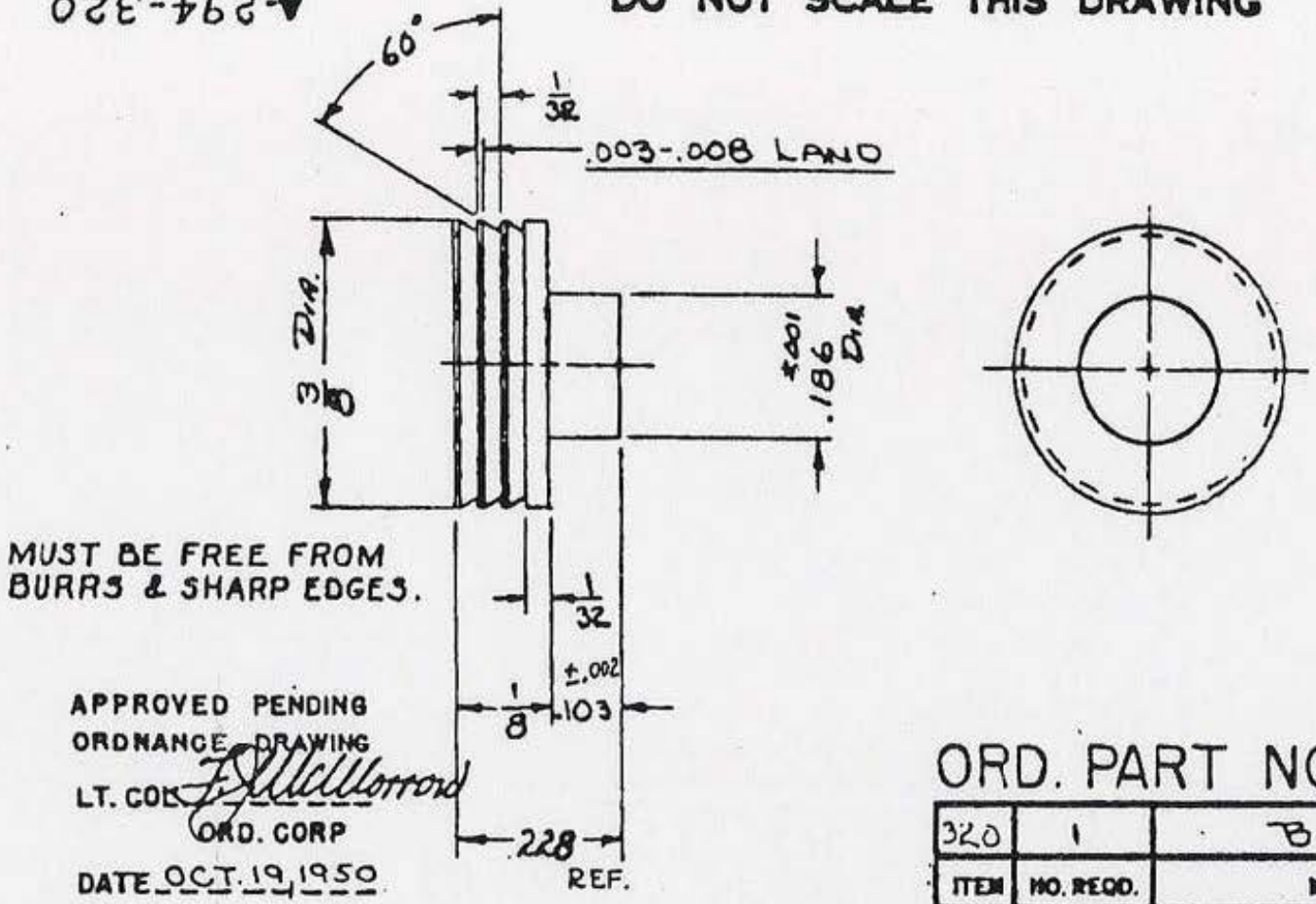

PROTECTIVE FINISH
TYPE II CLASS A.
AT ASSEMBLY 7265773

APPROVED PENDING
ORDNANCE DRAWING
LT. COL. F. H. McMorrow
ORD. CORP
DATE OCT. 19, 1950

ORD. PART NO. 7265749

ITEM	NO. REQD.	MATERIAL	SIZE
320	1	B-1113	3/8 DIA.

HARRINGTON & RICHARDSON ARMS CO.
WORCESTER, MASS.

SAFETY LEVER KNOB

MODEL 294 CAL. .22 HORNET SURVIVAL WEAPON

D'	CLASSIFICATION CANCELLED BY AUTHORITY OF OCM 33331	S.A.	13SEP54
C	DEPICTION CORRECTED, "REF," ADDED	S.A.	1-30-51
B	PROTECTIVE FINISH ADDED. REMOVED PENTRATE	S.A.	10-13-50
A	1/8 DIM. ADDED	TRINK	2/23/50
	REVISIONS	BY	DATE

FRACTIONAL DIMENSIONS ± .005 UNLESS SPECIFIED OTHERWISE

PART & NO. SAFETY LEVER KNOB #320		SCALE 4:1	OPER. NO. - 2
DESIGNED BY	DATE	DRAWING NO.	
DETAILED BY A.S.B.	DATE 3-20-50	A-294-320	
TRACED BY	DATE		
CHECKED BY TRINK	DATE 3-20-50		
APPVD. BY	DATE	SHEET 1 OF 1 SHEETS	

A-294-52

DO NOT SCALE THIS DRAWING

PROTECTIVE FINISH
TYPE II CLASS A
AT ASSEMBLY 7265766

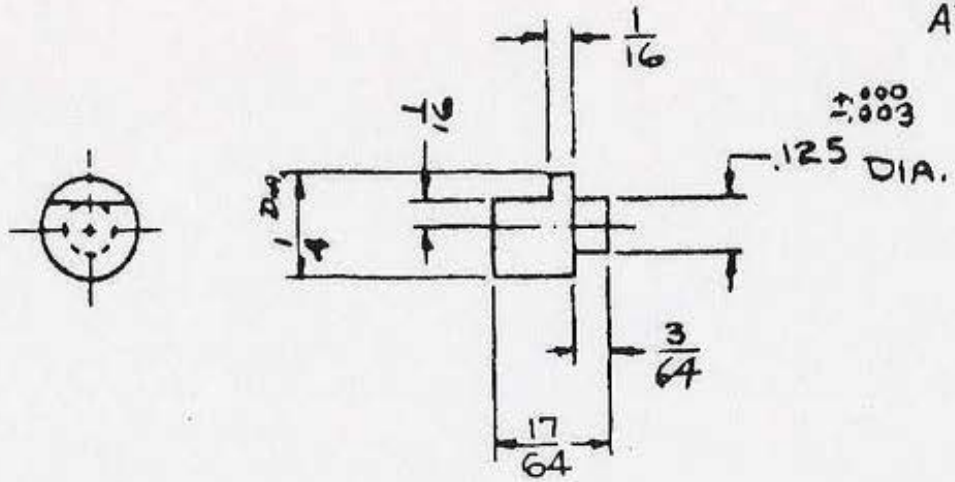

ORD. PART NO. 7265752

ITEM	NO. REQD.	MATERIAL	SIZE
	1	B-1113	1/4 DIA.

HARRINGTON & RICHARDSON ARMS CO.
WORCESTER, MASS.

BRACE STOP STUD

.22 CAL. HORNET SURVIVAL WEAPON

MODEL 294

APPROVED PENDING
ORDNANCE DRAWING
LT. COL. F. J. McMorrow
ORD. CORP
DATE OCT. 19, 1950.

D'	CLASSIFICATION CANCELLED BY AUTHORITY OF OCM 33331	S.A.	15SEP54
C	17/64 WAS 5/16	S.A.	4-11-51
B	PROTECTIVE FINISH ADDED.	S.A.	10-13-50
A	3/64 WAS 3/32	TRINK	8-26-50
	REVISIONS	BY	DATE

PART & NO. BRACE STOP STUD #52		SCALE 2:1	OPER. NO. ~
DESIGNED BY	DATE	DRAWING NO.	
DETAILED BY A.S.B.	DATE 1-11-50	A-294-52	
TRACED BY E.G.W.	DATE		
CHECKED BY V.C.B.	DATE 1-11-50		
APPVD. BY	DATE	SHEET OF SHEETS	

FRACTIONAL DIMENSIONS ± .005 UNLESS SPECIFIED OTHERWISE

30

A-165-38

DO NOT SCALE THIS DRAWING

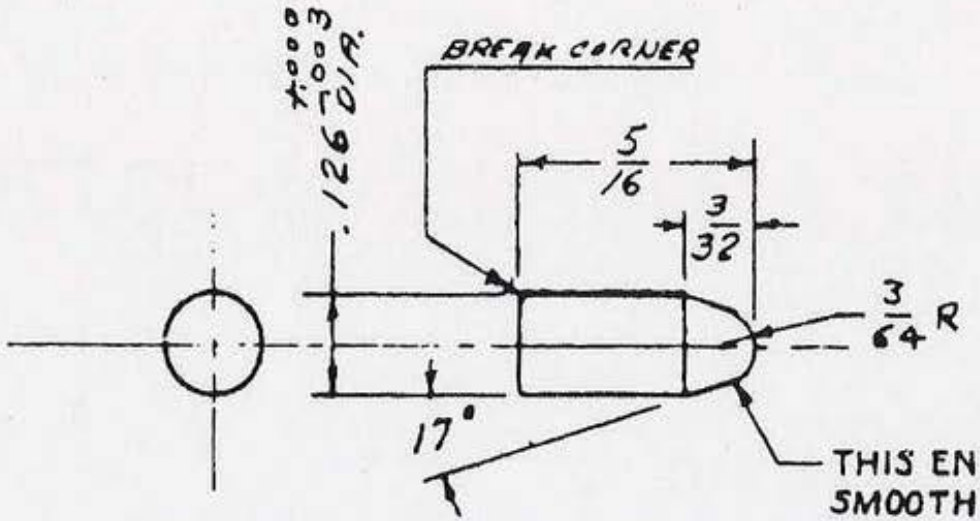

PROTECTIVE FINISH
TYPE II CLASS A
U.S.A. 57-0-2

ACTUAL SIZE

APPROVED PENDING
ORDNANCE DRAWING
LT. COL. [signature]
ORD. DEPT.
DATE MAY 24, 1950

CASE HARDEN
MINIMUM DEPTH .010

ORD PART NO. 7265753

ITEM	NO. REQD.	MATERIAL	SIZE
38	1	AISI B-1113	

HARRINGTON & RICHARDSON ARMS CO.
WORCESTER, MASS.

EXTRACTOR SPRING PLUNGER

NOTE: THIS DWG SUPERSEDES
DWG NO. (SAME) DATED NOV. 14, 45

MODEL 165 REISING .22 CAL LONG RIFLE

PART & NO. EXTRACTOR SPRING PLUNGER 38 | SCALE 4:1 | OPER. NO.

DESIGNED BY		DATE	
DETAILED BY [illegible]		DATE 8-12-49	
TRACED BY E.G.W.		DATE	
CHECKED BY [illegible]		DATE 8.12.49	
APPVD. BY		DATE	

DRAWING NO. A-165-38

SHEET 31 OF SHEETS

C			
B			
A	ADDED, PROTECTIVE FINISH & NOTE.	S.A.	10-14-50
	REVISIONS	BY	DATE

FRACTIONAL DIMENSIONS ± .005 UNLESS SPECIFIED OTHERWISE

A-294-54

DO NOT SCALE THIS DRAWING

PROTECTIVE FINISH
TYPE II CLASS A
U.S.A. 57-0-2

SOLID MILD STEEL RIVET - AMERICAN STANDARD TRUSS OR WAGON BOX HEAD

3/32 DIA. X 1/8 UNDER HEAD LENGTH

APPROVED PENDING
ORDNANCE DRAWING
LT. COL. F. Gillelland
ORD. DEPT.
DATE MAY 24, 1950

ORD PART NO. 7265757

ITEM	NO. REQD.	MATERIAL	SIZE
54	2	SOFT MILD STEEL	

HARRINGTON & RICHARDSON ARMS CO.
WORCESTER, MASS.

BRACE RELEASE SPRING RIVET

MODEL 294 .22 CAL. HORNET SURVIVAL WEAPON

PART & NO. BRACE REL. SPR. RIVET | SCALE | OPER. NO.

DESIGNED BY	DATE	DRAWING NO.	
DETAILED BY V.C.B.	DATE 1-10-50	A-294-54	
TRACED BY	DATE		
CHECKED BY A.S.B.	DATE 1-11-50		
APPVD. BY	DATE	SHEET 1 OF 1 SHEETS	

	REVISIONS	BY	DATE
C			
B'	CLASSIFICATION CANCELLED BY AUTHORITY OF OCM 33331	S.A.	15SEP54
A	ADDED, PROTECTIVE FINISH	S.A.	10-18-50

FRACTIONAL DIMENSIONS ± .005 UNLESS SPECIFIED OTHERWISE

33

A-294-250

DO NOT SCALE THIS DRAWING

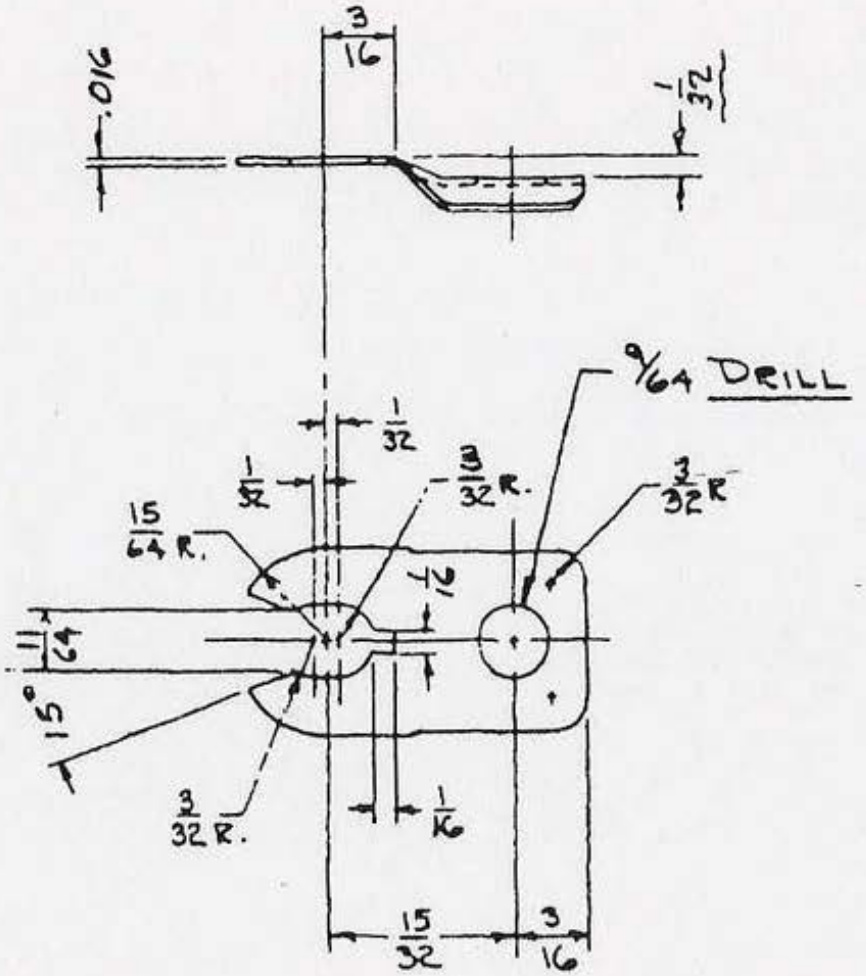

PROTECTIVE FINISH
TYPE II CLASS A
U.S.A. 57-0-2

APPROVED PENDING
ORDNANCE DRAWING
LT. COL. F. J. McMorrow
ORD. DEPT.
DATE MAY 24, 1950

REMOVE ALL BURRS SHARP EDGES & CORNERS TO PREVENT INJURY TO FINGERS.

ORD PART NO. 7265760

ITEM	NO. REQD.	MATERIAL	SIZE
	1	SPRING STEEL	

HARRINGTON & RICHARDSON ARMS CO.
WORCESTER, MASS.

BOLT STOP SCREW SPRING
.22 CAL. HORNET SURVIVAL WEAPON
MODEL 294

PART & NO. Bolt Stop Scr. Spr. # 250 | SCALE 2:1 | OPER. NO. ~

C				DESIGNED BY	DATE
B'	CLASSIFICATION CANCELLED BY AUTHORITY OF OCM 33331	S.A.	15SEP54	DETAILED BY A.S.R.	DATE 2-8-50
A	ADDED, PROTECTIVE FINISH & NOTE.	S.A.	10-13-50	TRACED BY	DATE
	REVISIONS	BY	DATE	CHECKED BY FRINK	DATE 3-20-50
FRACTIONAL DIMENSIONS ± .005 UNLESS SPECIFIED OTHERWISE				APPVD. BY	DATE

DRAWING NO. A-294-250

SHEET 1 OF 1 SHEETS

36

A-294-240

DO NOT SCALE THIS DRAWING

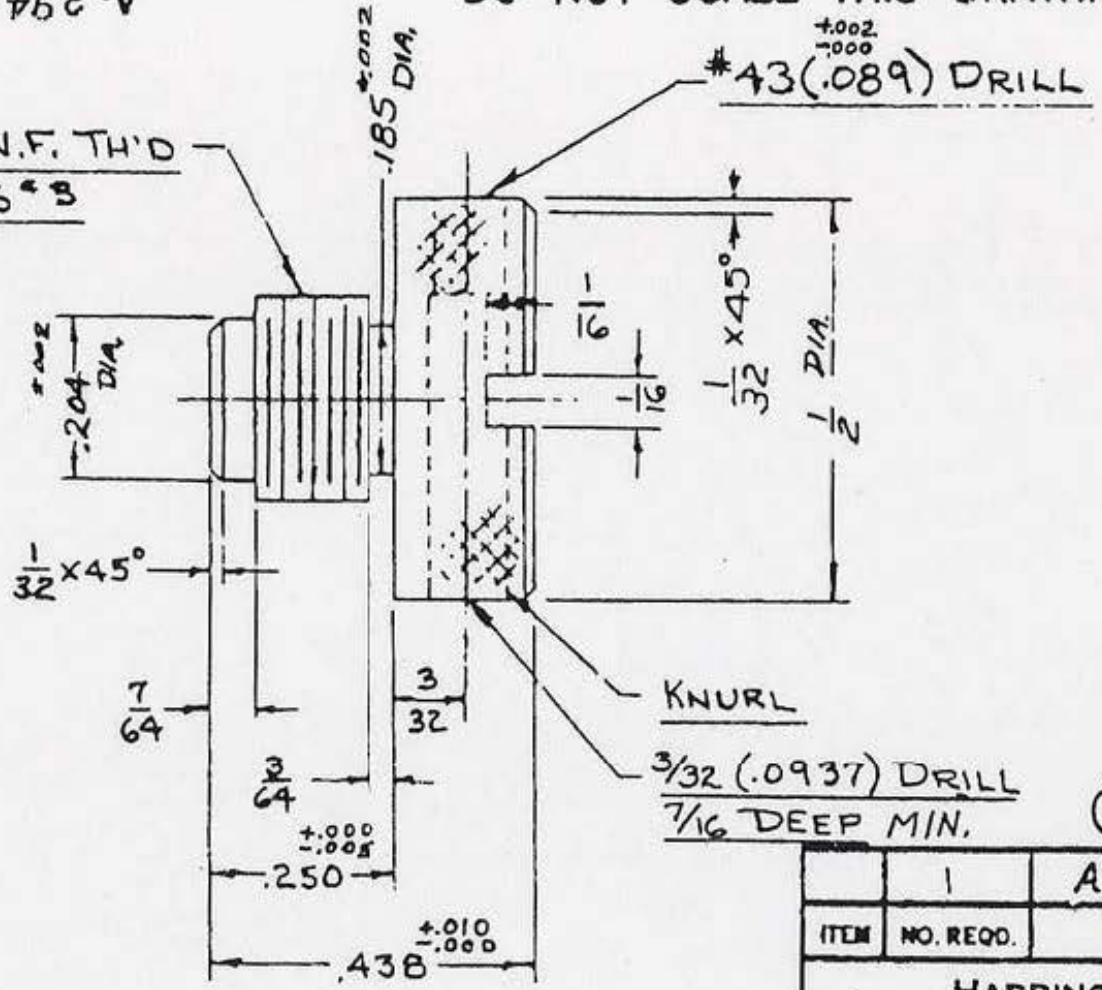

PROTECTIVE FINISH
TYPE II CLASS A
U.S.A. 57-0-2 AT ASSEMBLY
WITH 7265758

ORD. PART NO. 7265761

ITEM	NO. REQD.	MATERIAL	SIZE
	1	Al. S. I. - B1113	

HARRINGTON & RICHARDSON ARMS CO.
WORCESTER, MASS.

BARREL RETAINING SCREW
.22 CAL HORNET SURVIVAL WEAPON

MODEL 294

PART & NO. BARREL RET SCR #240 | SCALE 4:1 | OPER. NO. ~

D	E'	CHAMFER ADDED, TOL. ADDED, A.I.S.I.-B1113 WAS B-1113	S.A.	1-7-52	
		CLASSIFICATION CANCELLED BY AUTHORITY OF OCM 33331	S.A.	15SEP54	
C		PROTECTIVE FINISH ADDED.	S.A.	10-13-50	
B		7/16 DEEP WAS 7/8 DEEP	FINK	8-5-50	
A		7/64 WAS .0625; FLOORED 3/32 DRILL 7/8 DEEP	FINK	8-5-50	
		REVISIONS	BY	DATE	

APPROVED PENDING
ORDNANCE DRAWING
LT. COL. [illegible]
ORD. CORP
DATE OCT 19, 1950.

DESIGNED BY	DATE	DRAWING NO	
DETAILED BY ASB	DATE 2-8-50	A-294-240	
TRACED BY	DATE		
CHECKED BY [illegible]	DATE FEB [illegible]		
APPVD. BY	DATE	SHEET 1 OF 1 SHEETS	

FRACTIONAL DIMENSIONS ± .005 UNLESS SPECIFIED OTHERWISE

A-294-92

DO NOT SCALE THIS DRAWING

PROTECTIVE FINISH
TYPE II CLASS A
U.S.A. 57-0-2

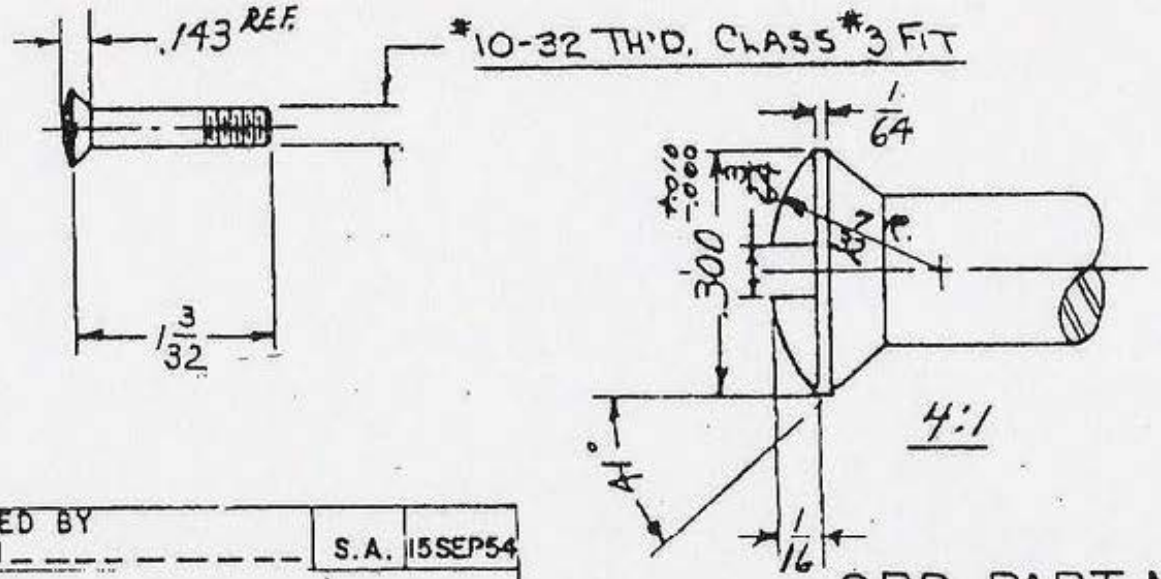

ORD. PART NO. 7265762

D1	CLASSIFICATION CANCELLED BY AUTHORITY OF OCM 33331	S.A.	15SEP54

ITEM	NO. REQD.	MATERIAL	SIZE
			#10-32 OVAL HEAD

HARRINGTON & RICHARDSON ARMS CO.
WORCESTER, MASS.

APPROVED PENDING
ORDNANCE DRAWING
LT. COL. F. H. McMorrow
ORD. CORP
DATE OCT. 19, 1950.

TAKE DOWN SCREWS (FRONT)
.22 CAL. HORNET SURVIVAL WEAPON
MODEL 294

PART & NO. TAKE DOWN SCRS. #92 | SCALE FULL | OPER. NO. ~

C	1 3/32 WAS 1 1/16	S.A.	1-2-51
B	PROTECTIVE FINISH ADDED; 1 7/16 WAS 1 1/8	S.A.	10-13-50
A	HEAD DETAIL ADDED	A.S.B	7-19-50
	REVISIONS	BY	DATE

DESIGNED BY	DATE
DETAILED BY A.S.B	DATE 1-11-50
TRACED BY E.G.W.	DATE
CHECKED BY V.C.B	DATE 1-11-50
APPVD. BY	DATE

DRAWING NO.
A-294-92 38

SHEET OF SHEETS

FRACTIONAL DIMENSIONS ± .005 UNLESS SPECIFIED OTHERWISE

-B

DO NOT SCALE THIS DRAWING

Ⓐ PROTECTIVE FINISH
TYPE II CLASS A
USA 57-0-2

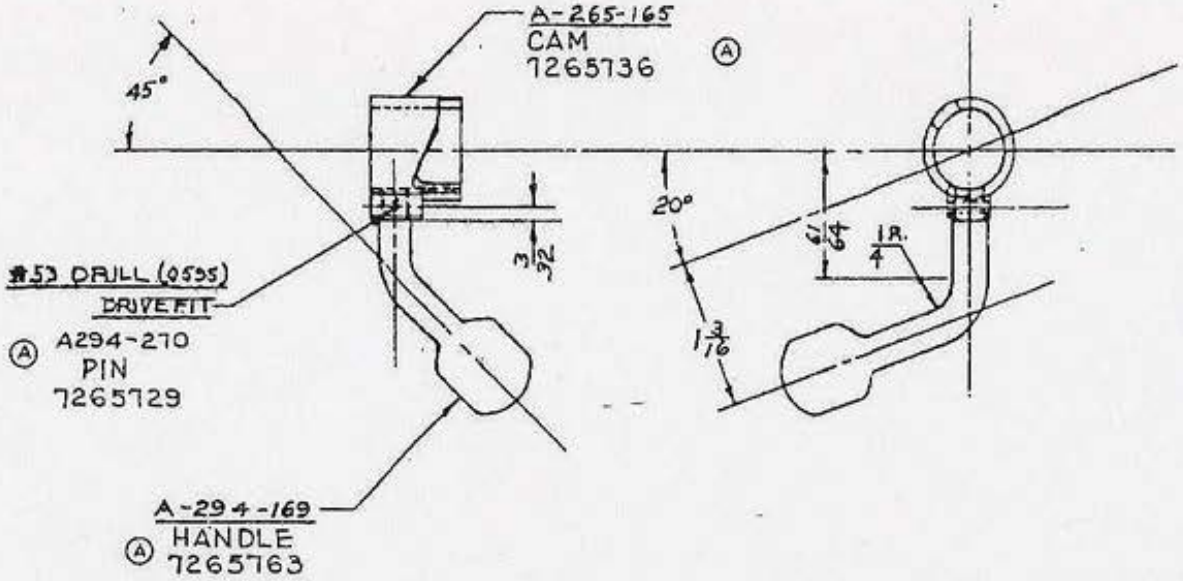

APPROVED PENDING
ORDNANCE DRAWING
LT. COL. F. Mellorrow
ORD. CORP
DATE - OCT 12, 1950

CYANIDE HARDEN

ORD. PART NO. 7265765

ITEM	NO. REQD.	MATERIAL	SIZE
180	1		

HARRINGTON & RICHARDSON ARMS CO.
WORCESTER, MASS.

COCKING CAM ASSEMBLY

MODEL 294 22 CAL. HORNET SURVIVAL WEAPON

PART & NO. COCKING CAM ASSEMBLY		SCALE FULL	DPER. NO.
DESIGNED BY	DATE	DRAWING NO.	
DETAILED BY V.C.B.	DATE FEB. 11, 50	B-294-180	
TRACED BY	DATE		
CHECKED BY R.S.S.	DATE 2-13-50		
APPVD. BY	DATE	SHEET OF SHEETS	

C			
B	CLASSIFICATION CANCELLED BY AUTHORITY OF OCM 33331	S.A.	15SEP54
A	ADDED; PROTFINISH, ORD. DRG. NO's & NOTE	S.A.	10-13-50
	REVISIONS	BY	DATE

FRACTIONAL DIMENSIONS ± UNLESS SPECIFIED OTHERWISE

DO NOT SCALE THIS DRAWING

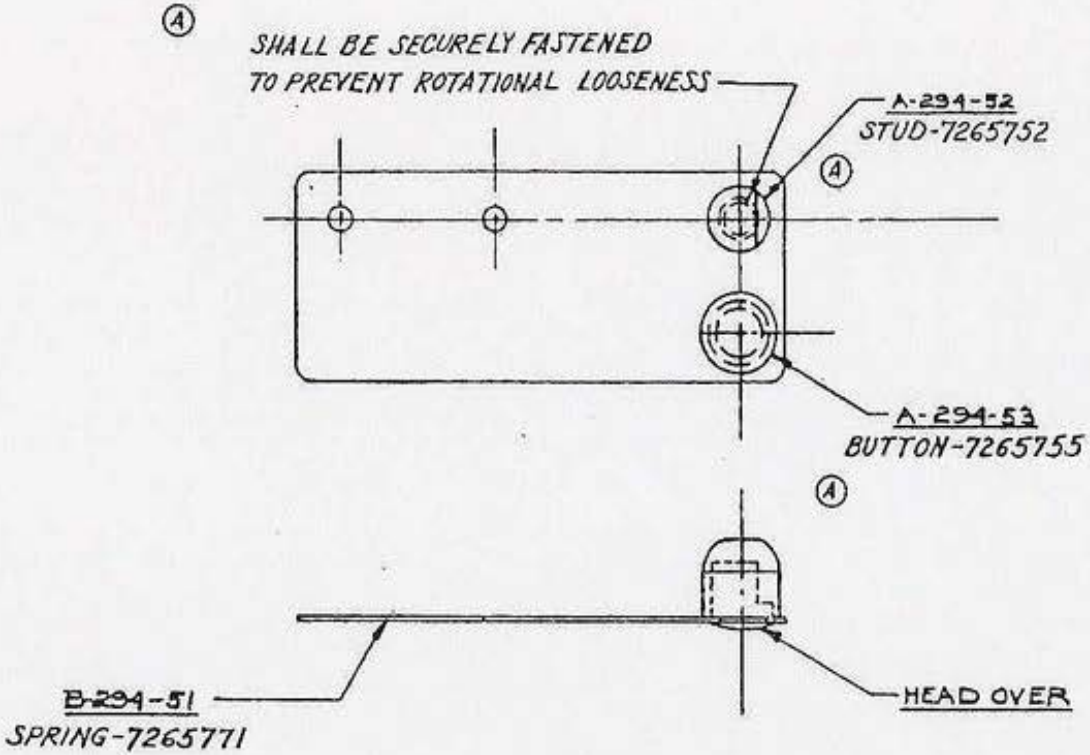

(A) PROTECTIVE FINISH
TYPE II CLASS A
U.S.A. 57-0-2

APPROVED PENDING
ORDNANCE DRAWING
LT. COL. F. McMillan
ORD. DEPT.
DATE MAY 24, 1950

ORD PART NO 7265766

57	1		
ITEM	NO. REQD.	MATERIAL	SIZE

HARRINGTON & RICHARDSON ARMS CO.
WORCESTER, MASS.

BRACE RELEASE ASSEMBLY

MODEL 294-.22 CAL. HORNET SURVIVAL WEAPON

PART & NO. BRACE REL. ASSEM.		SCALE 2/1	OPER. NO.
DESIGNED BY	DATE	DRAWING NO.	
DETAILED BY V.C.B.	DATE FEB. 13, 50	B-294-57	
TRACED BY	DATE		
CHECKED BY A.S.R.	DATE 1-14-50		
APPVD. BY	DATE	SHEET OF SHEETS	

C			
B	CLASSIFICATION CANCELLED BY AUTHORITY OF OCN 33331		
A	ADDED LETTERED NOTE, PROTECTIVE FINISH NOTE, & PART NUMBERS	S.A.	8-13-50
	REVISIONS	BY	DATE

FRACTIONAL DIMENSIONS ± .005 UNLESS SPECIFIED OTHERWISE

B-294-5

DO NOT SCALE THIS DRAWING

PROTECTIVE FINISH
(D) TYPE II CLASS A
U.S.A. 57-0-2

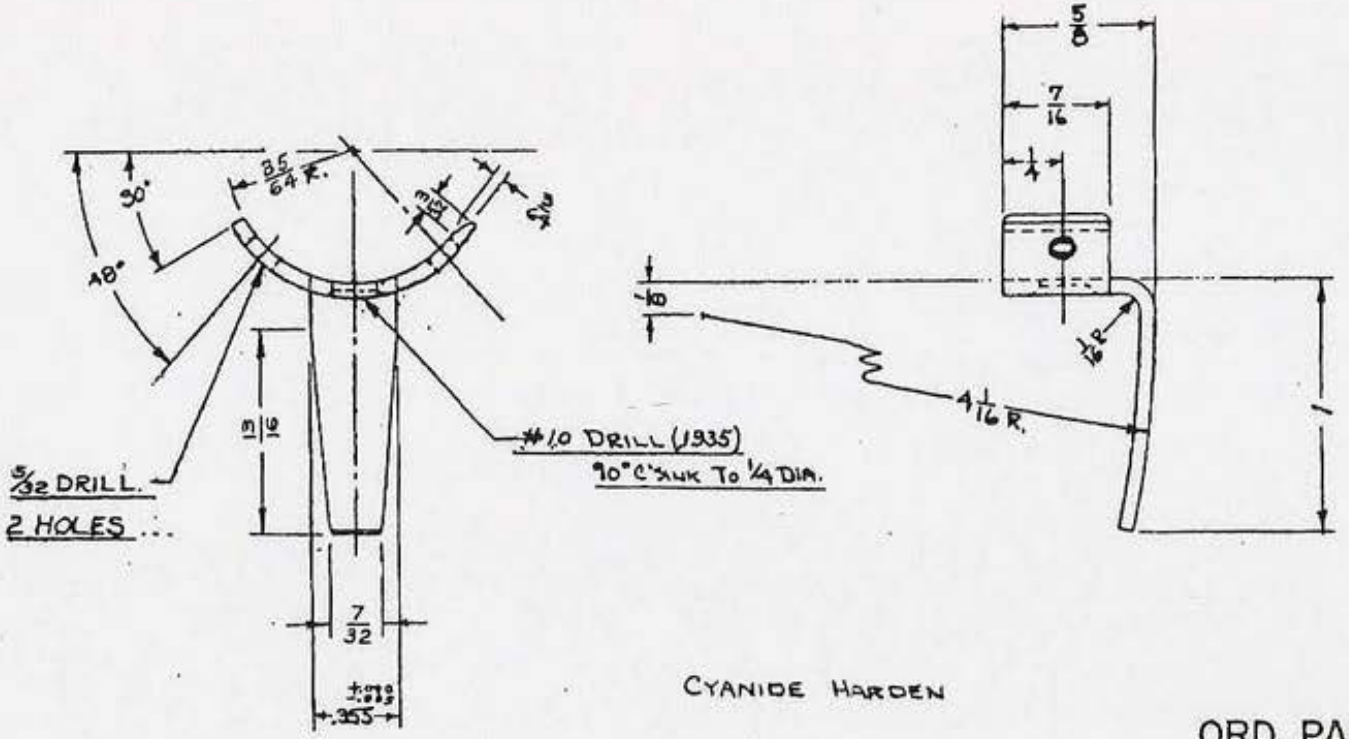

APPROVED PER DWG
ORDNANCE DRAWING
LT. COL. F. W. Williamson
ORD. COMD
DATE OCT. 19, 1950

CYANIDE HARDEN

ORD. PART NO. 7265768

REMOVE ALL BURRS, SHARP CORNERS & EDGES.

		AISI 1020	Bonnington #16 Gr. (.065)
ITEM	NO. REQD.	MATERIAL	SIZE

HARRINGTON & RICHARDSON ARMS CO.
WORCESTER, MASS.

MAGAZINE GUIDE
.22 CAL. HORNET SURVIVAL WEAPON

MODEL 294

PART & NO. MAGAZINE GUIDE # 5		SCALE 2:1	OPER. NO. ~
DESIGNED BY	DATE	DRAWING NO.	
DETAILED BY A.S.B.	DATE 1-11-50	B-294-5	
TRACED BY E.G.W.	DATE		
CHECKED BY V.C.B.	DATE 1-12-50		
APPVD. BY	DATE	SHEET OF SHEETS	57

F1	CLASSIFICATION CANCELLED BY AUTHORITY OF OCM 33331	S.A.	15SEP54
E	7/32 WAS 5/16; 13/16 WAS 1/4, AISI ADDED TO MAT.	S.A.	1-30-51
D	PROT. FINISH & NOTE ADDED. D .355 WAS .355	S.A.	10-13-50
C	90° C'SINK ADDED; 3/64 x 3/64 CHAMFER ADDED		7-31-50
B	35/64 R. WAS 17/32 R	V.C.B.	1-25-50
A	#10 WAS 13/64 DRILL; 5/32 DRILL THRU X FOR 5/32 C'SINK	V.C.B.	1-25-50
	REVISIONS	BY	DATE

FRACTIONAL DIMENSIONS ± UNLESS SPECIFIED OTHERWISE

43

DO NOT SCALE THIS DRAWING

PROTECTIVE FINISH
TYPE II CLASS A
USA 57-0-2

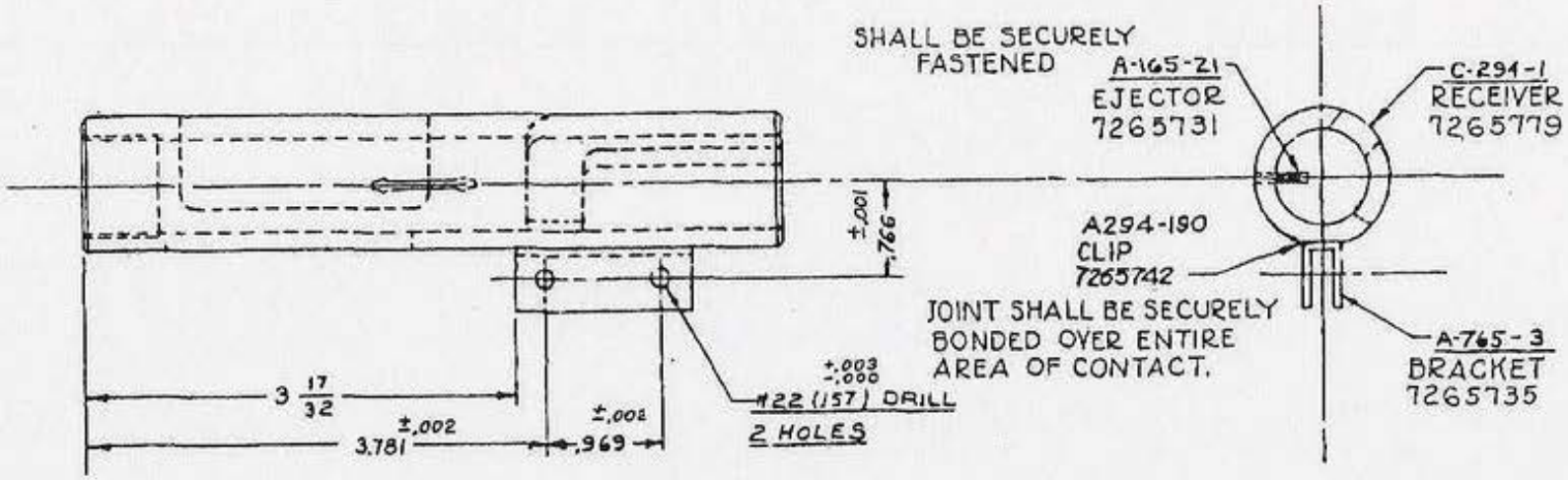

APPROVED PENDING
ORDNANCE DRAWING
LT. COL. F. H. McMorrow
ORD. CORP
DATE OCT. 19, 1950

ORD. PART NO. 7265769

ITEM	NO. REQD.	MATERIAL	SIZE

HARRINGTON & RICHARDSON ARMS CO.
WORCESTER, MASS.

RECEIVER ASSEMBLY

MODEL 294 .22 CAL. HORNET SURVIVAL WEAPON

PART & NO. RECEIVER ASSEM. #93		SCALE FULL	OPER. NO.
DESIGNED BY	DATE	DRAWING NO.	
DETAILED BY V.C. G	DATE 2-10 50	B-294-93	
TRACED BY	DATE		
CHECKED BY A.S.R	DATE 2-10-50		
APPVD. BY	DATE	SHEET OF SHEETS	

C	CLASSIFICATION CANCELLED BY AUTHORITY OF OCM 33331	S.A.	15 SEP 54
B	ADDED; CLIP, REMOVED; SILVER SOLDER NOTE	S.A.	1-7-52
A	ADDED; PROT. FINISH, ORD. DRG. NO.'s, & NOTES.	S.A.	10-13-50
	REVISIONS	BY	DATE

FRACTIONAL DIMENSIONS ± .005 UNLESS SPECIFIED OTHERWISE

DO NOT SCALE THIS DRAWING

© PROTECTIVE FINISH TYPE II CLASS A AT ASSEMBLY 7265766

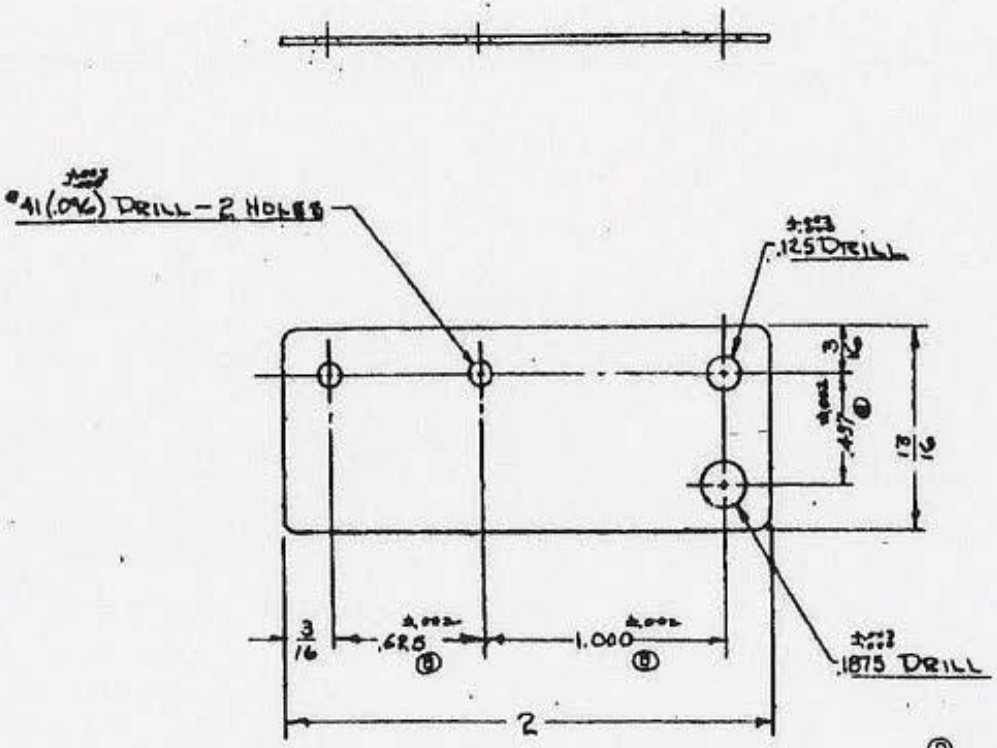

APPROVED PERSONS ORDNANCE DRAWING
LT. COL. [illegible]
DATE OCT. 19, 1950

Ⓓ SPRING TEMPER

ORD. PART NO. 7265771

ITEM	NO. REQD.	MATERIAL	SIZE
		SPRING STEEL	Birmingham #26 GA (.096)

HARRINGTON & RICHARDSON ARMS CO.
WORCESTER, MASS.

BRACE RELEASE SPRING
.22 CAL. HORNET SURVIVAL WEAPON
MODEL .294

PART & NO. Brace Release Spr. 51		SCALE 2:1	OPER. NO. ~
DESIGNED BY	DATE	DRAWING NO.	
DETAILED BY A.S.B.	DATE 1-11-50	B-294-51	
TRACED BY	DATE		
CHECKED BY Y.C.A.	DATE 1-11-50		
APPVD. BY	DATE	SHEET OF SHEETS	

E	CLASSIFICATION CANCELLED BY AUTHORITY OF OCM 33531	S.A.	16 SEP 54
D	ADDED SPRING TEMPER	S.A.	1-7-52
C	PROTECTIVE FINISH ADDED.	S.A.	10-13-50
B	.625" Was 7/8; .437" Was 7/16; Added .1875"	[illegible]	7-31-50
A	REDESIGNED	A.S.B.	1-28-50
	REVISIONS	BY	DATE

FRACTIONAL DIMENSIONS ± .005 UNLESS SPECIFIED OTHERWISE

DO NOT SCALE THIS DRAWING

Ⓑ PROTECTIVE FINISH
TYPE II CLASS A
USA 57-0-2

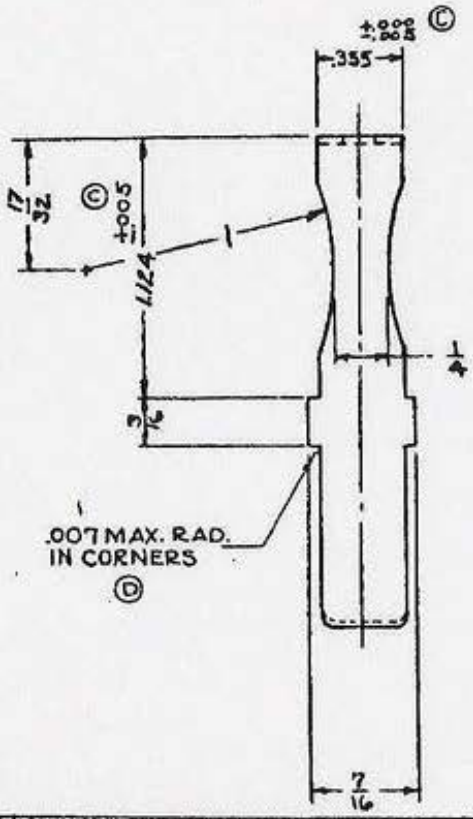

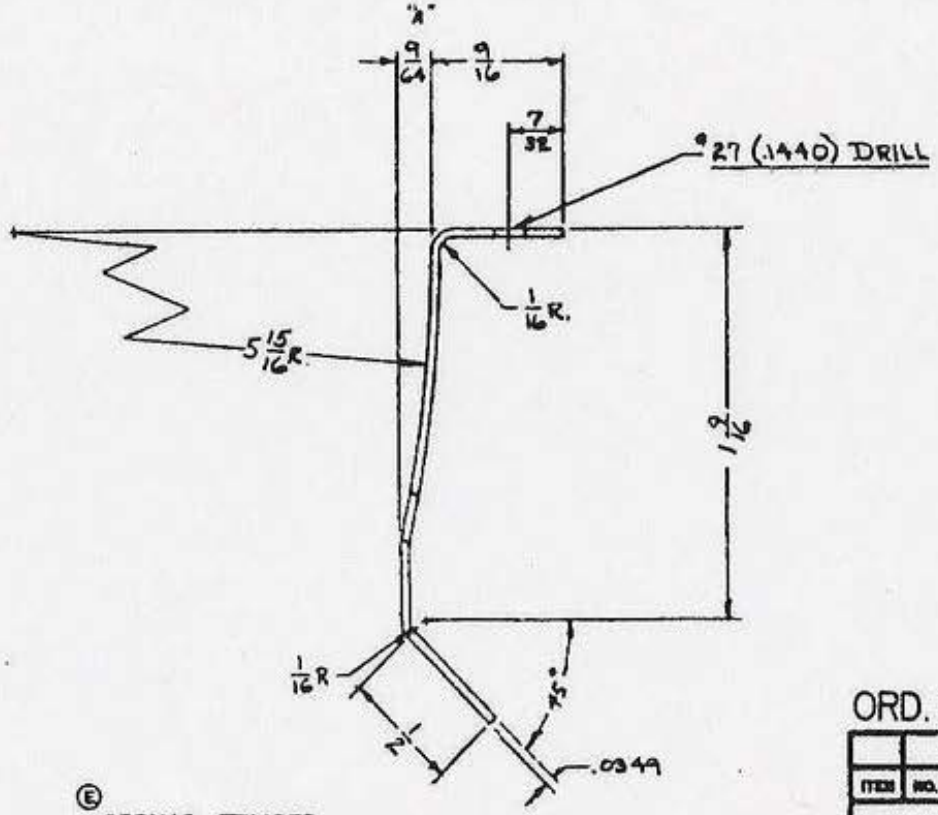

Ⓔ SPRING TEMPER

Ⓑ REMOVE ALL BURRS, SHARP CORNERS AND EDGES.

APPROVED PENDING
ORDNANCE DRAWING
LT. COL. F. H. McMorrow
ORD. CORP
DATE OCT. 19, 1950

ORD. PART NO. 7265772

		SPRING STEEL	BIRMINGHAM #21 GA. (.032)
ITEM	NO. REQD.	MATERIAL	SIZE

HARRINGTON & RICHARDSON ARMS CO.
WORCESTER, MASS.

MAGAZINE RELEASE SPRING
22 CAL. HORNET SURVIVAL WEAPON

MODEL 294

PART & NO. Mag. Release Spring #21		SCALE 2:1	OPER. NO. ~
DESIGNED BY	DATE	DRAWING NO.	
DETAILED BY A.S.R.	DATE 1-11-50	B-294-33	
TRACED BY	DATE		
CHECKED BY Y.C.B.	DATE 1-11-50		
APPVD. BY	DATE	SHEET OF SHEETS	

F	CLASSIFICATION CANCELLED BY AUTHORITY OF OCM 33331	S.A.	18SEP54
E	ADDED, SPRING TEMPER	S.A.	1-7-52
D	NOTE ADDED	S.A.	4-11-51
C	±.005 WAS ±.002; ±.000/-.005 WAS ±.000/-.002	S.A.	1-30-51
B	ADDED; PROTECTIVE FINISH & NOTE	S.A.	10-13-50
A	REVISED OUTLINE	H	3-1-50
	REVISIONS	BY	DATE

FRACTIONAL DIMENSIONS ± UNLESS SPECIFIED OTHERWISE

H1

DO NOT SCALE THIS DRAWING

PROTECTIVE FINISH
TYPE II CLASS A
U.S.A. 57-0-2

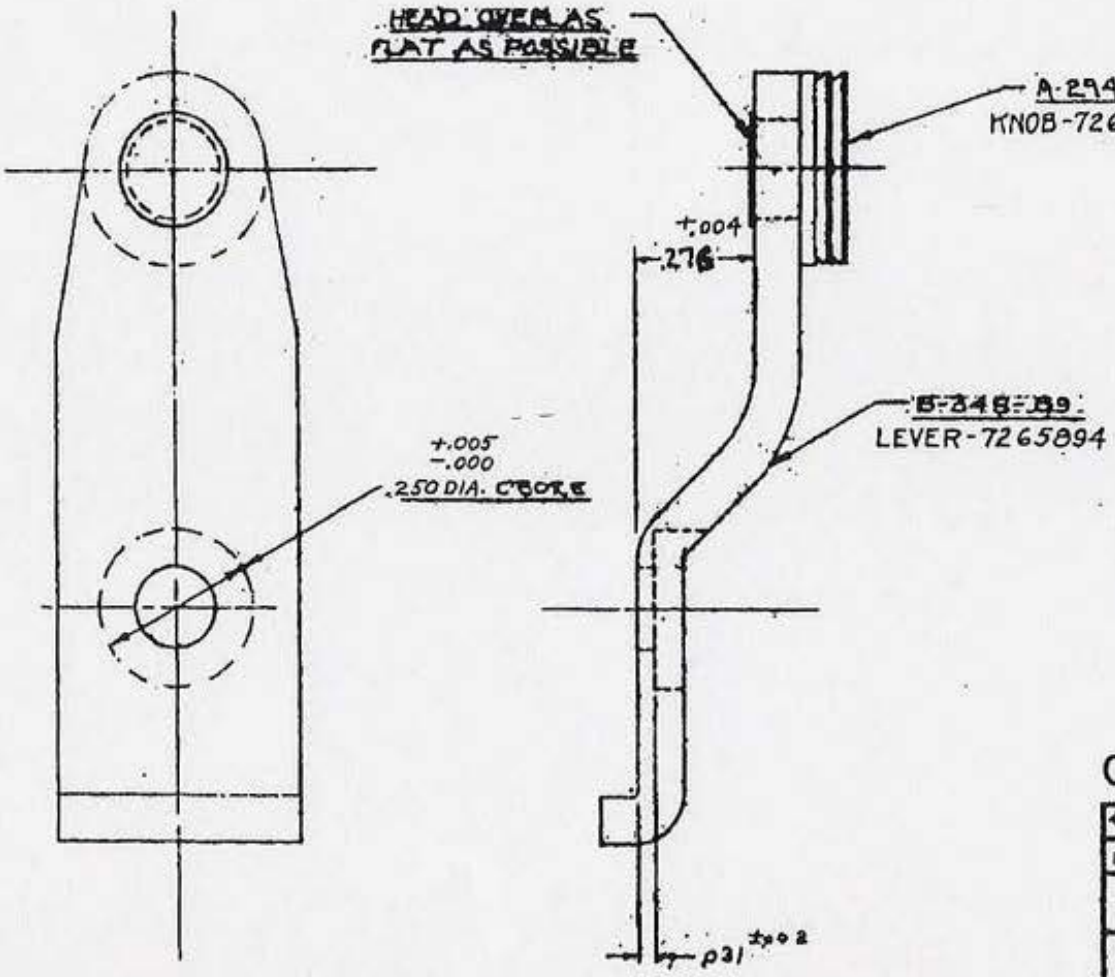

APPROVED PENDING
ORDNANCE DRAWING
LT. COL. F. H. McMorrow
ORD. CORP
DATE OCT 19, 1950

ORD. PART NO. 7265773

ITEM	NO. REQD.	MATERIAL	SIZE
49	1		

HARRINGTON & RICHARDSON ARMS CO.
WORCESTER, MASS.

SAFETY LEVER ASSEM.

MODEL 224 .22 CAL. MARKSMAN SURVIVAL WEAPON

PART & NO. SAFETY LEVER ASSEM		SCALE 4	OPER. NO.
DESIGNED BY	DATE	DRAWING NO.	
DETAILED BY V. C. D.	DATE FEB. 13, 5?	B-294 49	
TRACED BY	DATE		
CHECKED BY A.S.B.	DATE 10-13-50		
APPR. BY	DATE	SHEET OF SHEETS	57

E'	CLASSIFICATION CANCELLED BY AUTHORITY OF OCM 33331	S.A.	65EP64
D	PROTECTIVE FINISH ADDED, ORD. PT. NO. 3, ADDED	S.A.	10-13-50
C	ADDED .276 +.004 DIM.		9-11-50
B	.250 ±.03 WAS 5/16 DIA.	TRINK	8-22-50
A	A-294-320 WAS A-348-85	TRINK	4-28-50
	REVISIONS	BY	DATE

FRACTIONAL DIMENSIONS ± [illegible] UNLESS SPECIFIED OTHERWISE.

DO NOT SCALE THIS DRAWING

PROTECTIVE FINISH
TYPE II CLASS A
AT ASSEMBLY 7265775

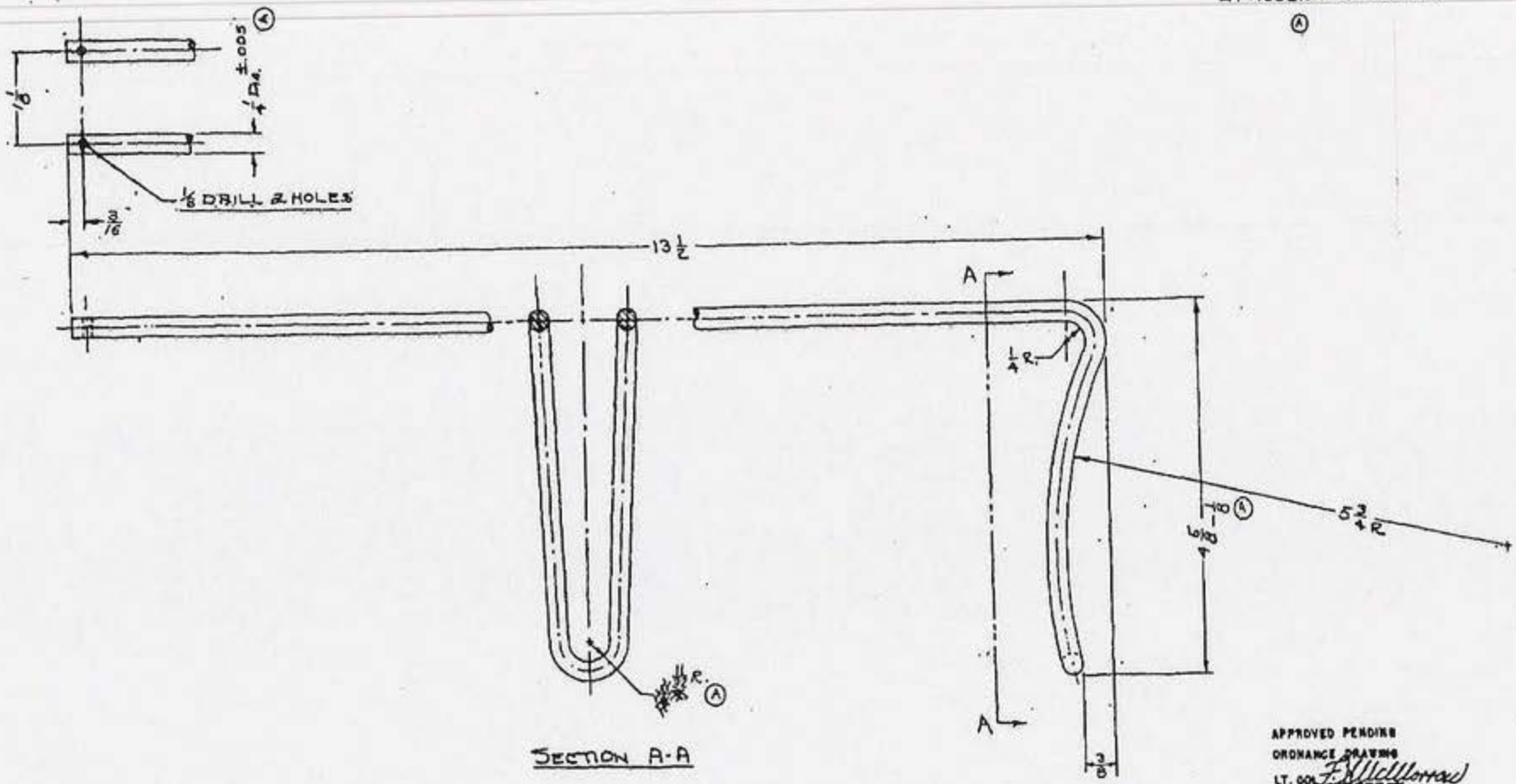

APPROVED PENDING
ORDNANCE DRAWING
LT. COL. F. W. McMorrow
ORD. CORP
DATE OCT 12, 1950

ORD. PART NO. 7265776

ITEM	NO. REQD.	MATERIAL	SIZE
		A151 1020 BUIR & BUIS/ALTERNATIVE	1/4 Dia.

HARRINGTON & RICHARDSON ARMS CO.
WORCESTER MASS.

SHOULDER WEAPON
22 CAL. MAGNUM SURVIVAL WEAPON

MODEL R-99

CLASSIFICATION CANCELLED BY AUTHORITY OF DCM 33331	S.A.	12-27-50
ADDED: PROT. FIN., BUIR & BUIS/ALTERNATIVE; .005	S.A.	11-13-50
5/32 R. WAS 1/8 R. REVISIONS 5 3/4 - 1/2 WAS 4 5/8	BY	DATE

UNLESS OTHERWISE DIMENSIONS ± UNLESS SPECIFIED OTHERWISE

DRAWING NO. C-294

DO NOT SCALE THIS DRAWING

PROTECTIVE FINISH
TYPE II CLASS A
U.S.A. 57-0-2

COUNTERSINK WITH #40 OR #41 DRILL WITH TAPERED END.

RADIUS "S" & DIAMETER "R" SHALL BE CONCENTRIC WITH DIAMETER "M" WITHIN .006 INDICATOR READING.

OPTIONAL

SLOTS "P" & "Q" SHALL BE CENTRAL WITH DIAMETER "M" WITHIN ±.002

DIMENSION "X" SHALL BE CENTRAL WITH DIAMETER "M" WITHIN ±.003

DIAMETERS "L", "M", & "N" SHALL BE CONCENTRIC WITH EACH OTHER WITHIN .006 INDICATOR READING

.095 −.010 DIA. COUNTERBORE X 45° ANGLE OPTIONAL METHOD

DIAMETERS "L" & "M" SHALL BE UNIFORMLY SMOOTH

CYANIDE HARDEN
1425°-10 MIN. QUENCH IN OIL

$\frac{1}{2}$-32 N.S. TH'D

THESE SURFACES SHALL BE UNIFORMLY SMOOTH & SQUARE WITH ℄

#15 (.180) DRILL

R .067 +.003

#30 (.1285) DRILL 1 3/16 DEEP

#16 (.177) DRILL .82" C'SINK TO $\frac{13}{64}$ DIA.

SLOT "V" SHALL BE CENTRAL WITH DIAMETER "M" WITHIN ±.003

APPROVED PENDING ORDNANCE DRAWING
LT. COL. F. L. Mellstrom
ORD. CORP
DATE OCT. 12, 1950

REMOVE ALL BURRS, SHARP CORNERS, AND EDGES

ORD. PART NO. 7265778

K	CLASSIFICATION CANCELLED BY AUTHORITY OF OCN 33331	S.A. 15SEP54
G	ADDED SUB MAT'L .093-.095 WAS .095-.097, 5/8 WAS 5/16 DELETED NOTE USE MOD. 295 BLADE. ADDED SIZE	S.A. 1-7-52
F	ADDED SECTIONAL VIEW & NOTE; OP. METHOD NOTE CHANGED; 5 NOTES. "REAM" REMOVED 3/16 TO 1/2 R. CUTTER WAS 3/8 R.	S.A. 1-2-51
E	ADDED NOTE, FINISH-REMOVED, PENTRATE & REMOVE SHARP CORNERS ADDED SECTIONAL VIEW	S.A. 10-13-50
D	1 R. WAS 3/8 R	A.S.B. 8-16-50
C	TOLERANCE ADDED	TRUNK 8-7-50
B	.620 ADDED	TRUNK 8-7-50
A	.062 WAS .062	7.13.50
	REVISIONS	BY DATE

FRACTIONAL DIMENSIONS ± .005 UNLESS SPECIFIED OTHERWISE

	SUBSTITUTE SITES A01-0003 A01-0020		
ITEM	NO. REQD.	MATERIAL	SIZE

HARRINGTON & RICHARDSON ARMS CO.
WORCESTER MASS.

BOLT

.22 CAL HORNET SURVIVAL WEAPON

MODEL 294

PART & NO. Bolt #2		SCALE 2:1	OPER. NO.
DESIGNED BY	DATE	DRAWING NO. 51	
DETAILED BY A.S.B.	DATE 2-9-50	C-294-2	
TRACED BY	DATE		
CHECKED BY Y.G.B.	DATE 2-9-50		

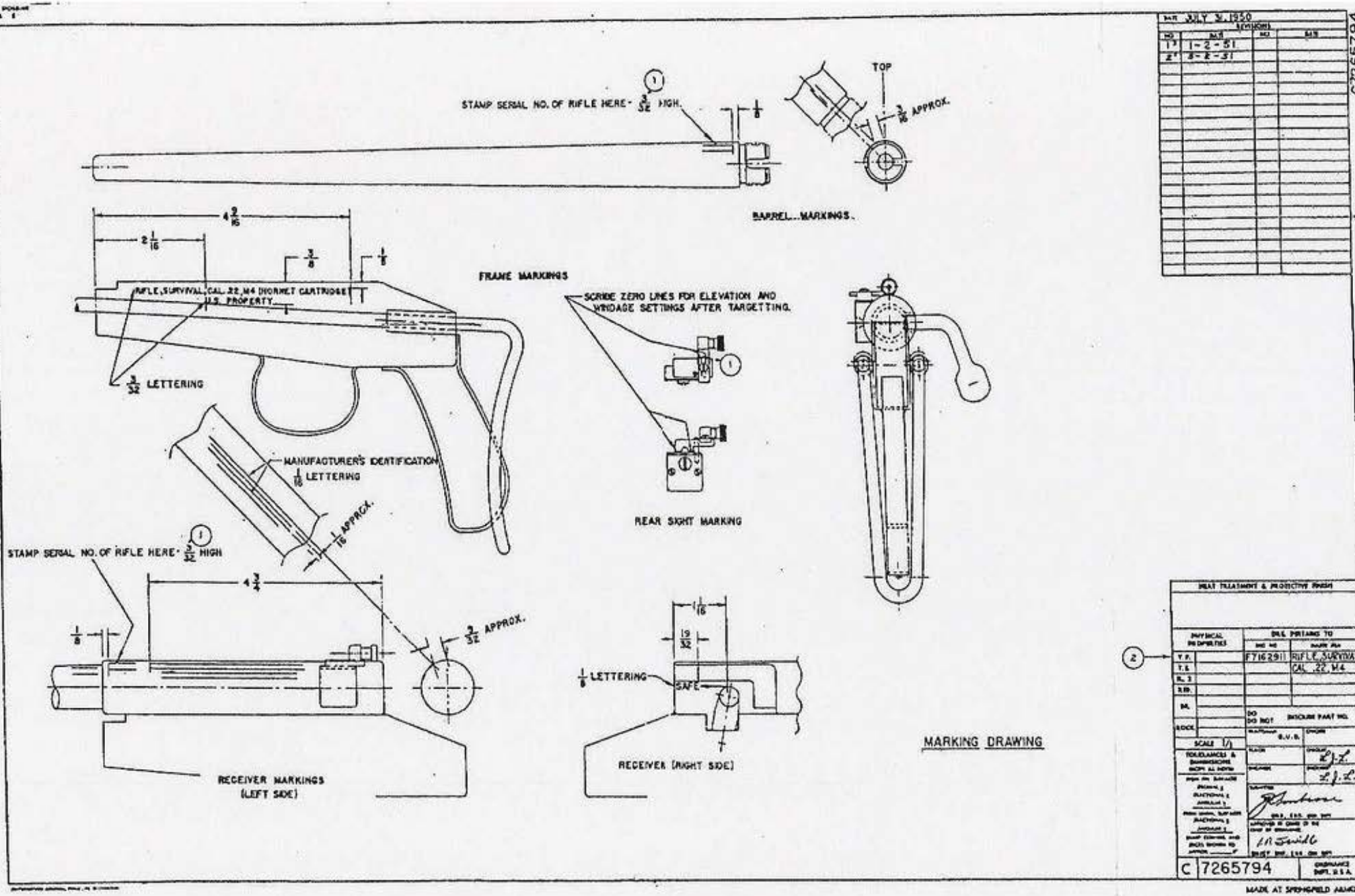
STAMP SERIAL NO. OF RIFLE HERE - 3/32 HIGH.
1/8
TOP
3/16 APPROX.
BARREL MARKINGS.
4 2/16
2 1/16
3/8
1/8
FRAME MARKINGS
RIFLE, SURVIVAL, CAL. .22, M4 DIORNET CARTRIDGE
U.S. PROPERTY
3/32 LETTERING
MANUFACTURER'S IDENTIFICATION
1/16 LETTERING
1/16 APPROX.
SCRIBE ZERO LINES FOR ELEVATION AND
WINDAGE SETTINGS AFTER TARGETTING.
REAR SIGHT MARKING
STAMP SERIAL NO. OF RIFLE HERE - 3/32 HIGH
4 3/4
1/8
3/32 APPROX.
RECEIVER MARKINGS
(LEFT SIDE)
1/16
19/32
1/8 LETTERING
SAFE
RECEIVER (RIGHT SIDE)
MARKING DRAWING
DATE JULY 3, 1950
REVISIONS
NO. DATE
1 1-2-51
2 8-2-51
HEAT TREATMENT & PROTECTIVE FINISH
PHYSICAL PROPERTIES
T.P.
T.S.
R.3
R.B.
BH.
ROCK.
DRG. PERTAINS TO
DRG. NO. F7162911
NAME OF RIFLE, SURVIVAL
CAL. .22, M4
DO NOT INCLUDE PART NO.
SCALE 1/1
TOLERANCES & DIMENSIONS
C 7265794
ORDNANCE DEPT. U.S.A.
MADE AT SPRINGFIELD ARMORY

-V

DO NOT SCALE THIS DRAWING

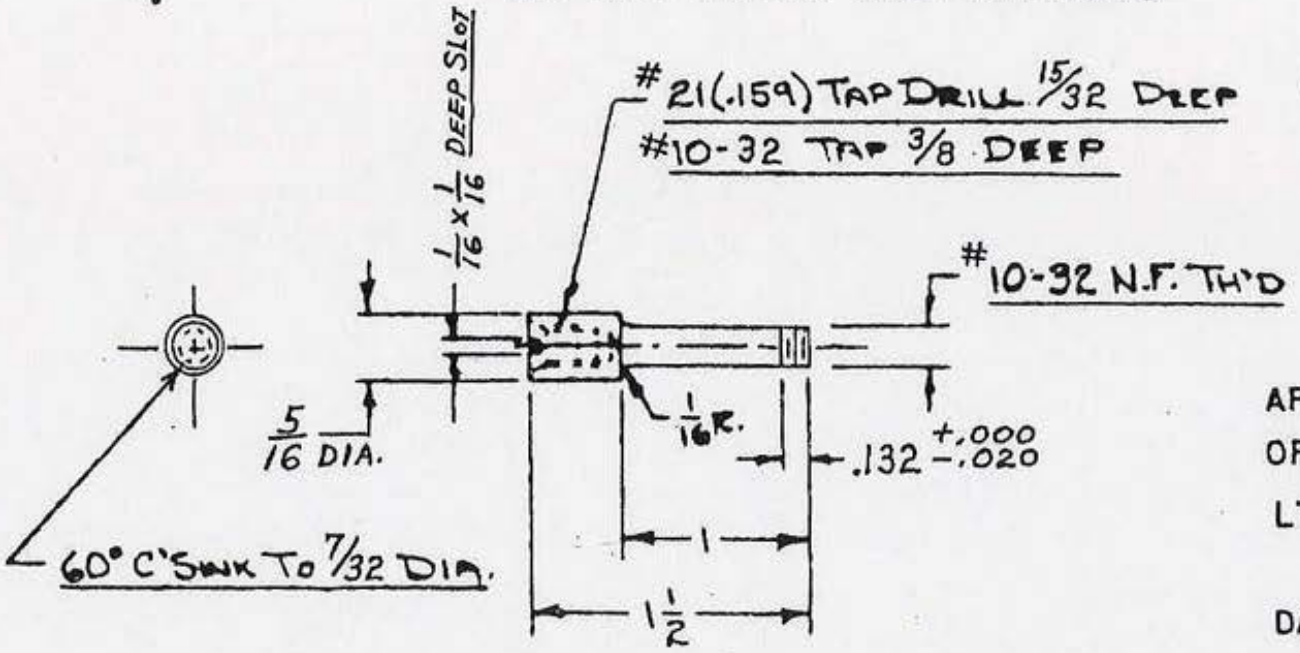

(A) PROTECTIVE FINISH
TYPE II CLASS A
U.S.A. 57-0-2

APPROVED PENDING
ORDNANCE DRAWING
LT. COL. F. H. McMorrow
ORD. CORP.
DATE NOV. 22, 1950.

ORD. PART NO. 7265857

ITEM	NO. REQD.	MATERIAL (B)	SIZE
1		A.I.S.I.-B1113	5/16 DIA.

HARRINGTON & RICHARDSON ARMS CO.
WORCESTER, MASS.

(A) TAKE DOWN SCREW STUD
.22 CAL. HORNET SURVIVAL WEAPON
MODEL 294

PART & NO. TAKE DOWN SCREW EXT. R | SCALE FULL | OPER. NO. ~

C			
B	A294-335 WAS A294-330, A.I.S.I.-B1113 WAS B-1113	S.A.	1-7-52
A	PROT. FINISH ADDED. "STUD" WAS "EXTENSION"	S.A.	11-20-50
	REVISIONS	BY	DATE

DESIGNED BY	DATE
DETAILED BY A.S.B.	DATE 10-9-50
TRACED BY	DATE
CHECKED BY	DATE Oct 13-50
APPVD. BY	DATE

DRAWING NO. (B) A-294-335

56

FRACTIONAL DIMENSIONS ± .005 UNLESS SPECIFIED OTHERWISE

SHEET 1 OF 1 SHEETS

DO NOT SCALE THIS DRAWING

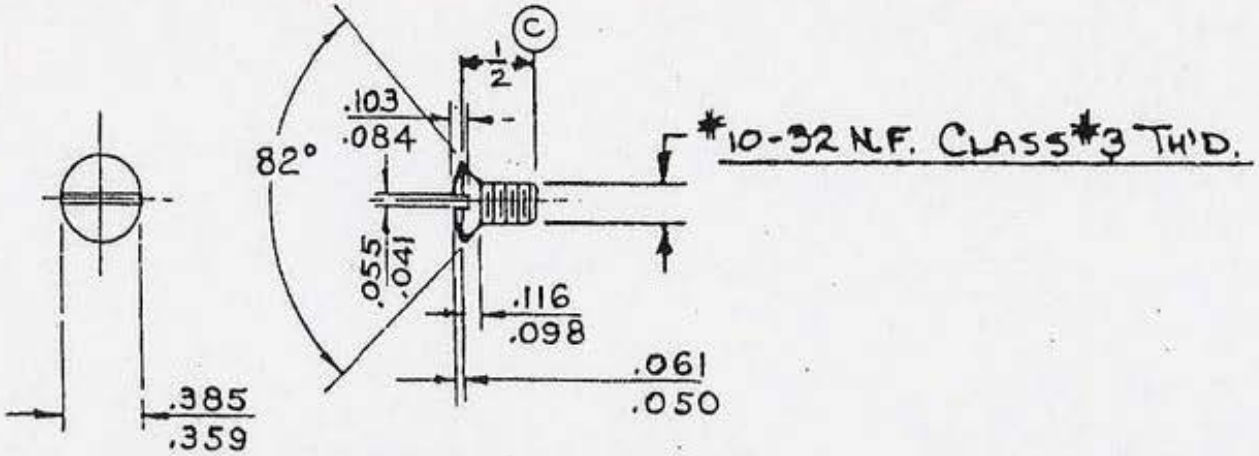

(A) PROTECTIVE FINISH
TYPE II CLASS A
U.S.A. 57-0-2

APPROVED PENDING
ORDNANCE DRAWING
LT. COL. F. J. McMorrow
ORD. CORP.
DATE NOV. 22 1950.

ORD. PART NO. 7265858

340	1	COMMERCIAL	*10-32 N.F. OVAL HEAD
ITEM	NO. REQ'D.	MATERIAL	SIZE

HARRINGTON & RICHARDSON ARMS CO.
WORCESTER, MASS.

(A) TAKE DOWN SCREW STUD SCREW
.22 CAL. HORNET SURVIVAL WEAPON

MODEL 294

PART & NO. Take Down Screw Stud Screw #340 | SCALE FULL | OVER NO. ~

C	LENGTH DIMENSION CHANGED	S.A.	5-15-51	DESIGNED BY	DATE
B	HEAD DIMENSIONS ADDED	S.A.	1-30-51	DRAWN BY A.S.T.	DATE 10-10-50
A	PROT. FINISH ADDED. "STUD SCREW" WAS "REAR".	S.A.	11-20-50	TRACED BY E.G.W.	DATE
	REVISIONS	BY	DATE	CHECKED BY	DATE Oct. 18-50
				APPR. BY	DATE

DRAWING NO. A-294-340

SHEET 1 OF 1 SHEETS

FRACTIONAL DIMENSIONS ± .002 UNLESS SPECIFIED OTHERWISE

DO NOT SCALE THIS DRAWING

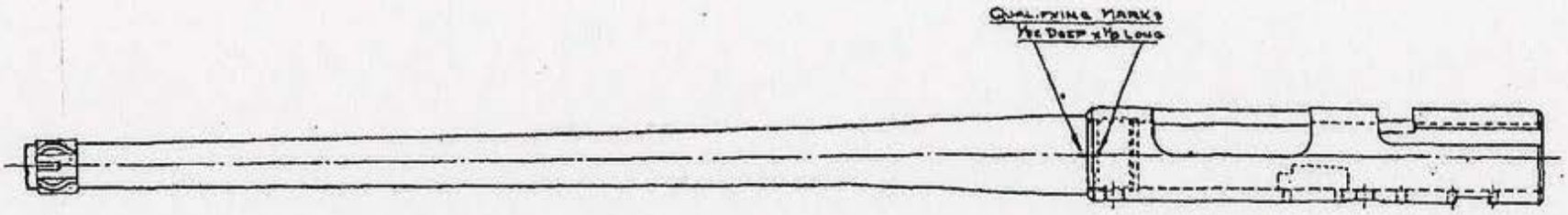

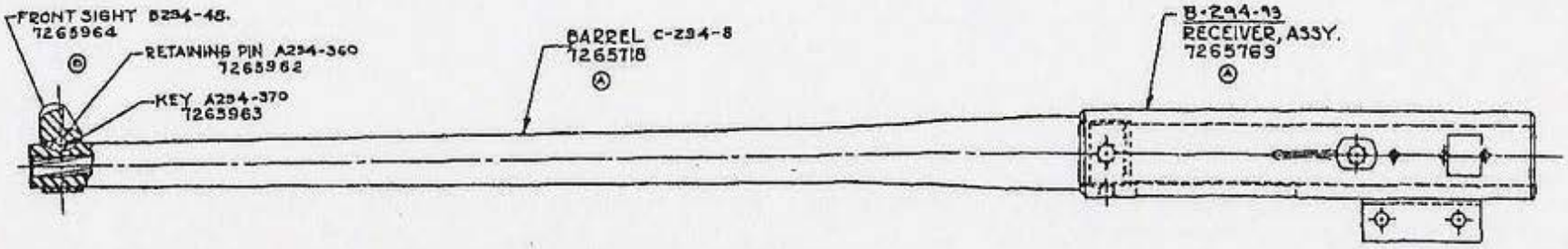

Ⓐ THE THREAD OF THE BARREL & RECEIVER SHALL BE QUALIFIED TO PERMIT:

1. SCREW BARREL INTO RECEIVER TILL IT SHOULDERS; THEN BACK OFF AS NECESSARY, BUT NOT TO EXCEED 15°, UNTIL QUALIFYING MARKS LINE UP AS SHOWN.
2. THE FLAT AT THE LEFT HAND SIDE OF THE BARREL THREAD SHALL LINE UP WITH THE TAPPED HOLE AT LEFT SIDE OF THE RECEIVER.

APPROVED PENDING ORDNANCE DRAWING.
LT. COL. ORD. CORPS
DATE OCT 19, 1950

ORD. PART NO. 7265889

ITEM	NO. REQD.	MATERIAL	SIZE

HARRINGTON & RICHARDSON ARMS CO.
WORCESTER, MASS.

BARREL & RECEIVER ASSEMBLY
.22 CAL. HORNET SURVIVAL WEAPON

MODEL 294

PART & NO. DIVISION	REF. ORDER	SCALE FULL	DRAWING NO.
DESIGNED BY	DATE		C-294-127
DETAILED BY	DATE 9-9-50		
TRACED BY	DATE		
CHECKED BY	DATE		
APPVD. BY	DATE		SHEET 1 OF 1 SHEETS

C	CLASSIFICATION CANCELLED BY AUTHORITY OF OCS 32251	S.A.	8-18-54
B	DEPICTION CHANGED, ORD. PART NO'S & FRONT SIGHT ADDED	S.A.	1-30-51
A	ADDED ORD. PART NOS. & NOTE.	S.A.	10-13-50
	REVISIONS	BY	DATE

FRACTIONAL DIMENSIONS ± .005 UNLESS SPECIFIED OTHERWISE

DO NOT SCALE THIS DRAWING

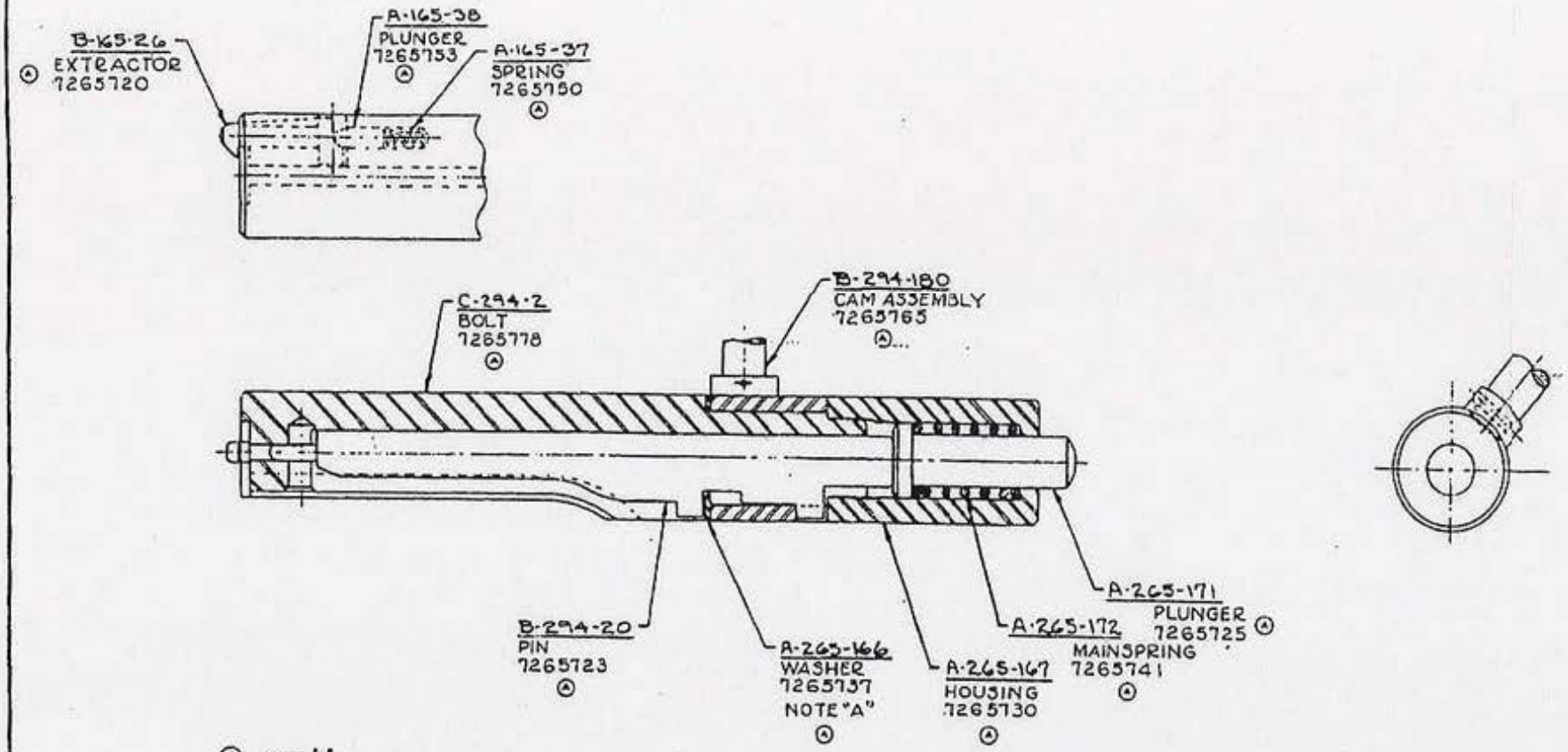

(A) NOTE: "B"
THE FIRING PIN SHALL BE FREE FROM ANY
(B) BINDING ACTION ✓

(A) NOTE: "A"
PROPER THICKNESS OF WASHER, BREECH SPACE
(B) SHALL BE SELECTED AFTER TARGETING TO
OBTAIN THE REQUIRED BREECH SPACE.

APPROVED PENDING
ORDNANCE DRAWING
LT. COL. [signature]
ORD. CORP
DATE OCT. 19, 1950

ORD. PART NO. 7265891

ITEM	NO. REQD.	MATERIAL	SIZE

HARRINGTON & RICHARDSON ARMS CO.
WORCESTER, MASS.

BOLT ASSEMBLY
.22 CAL. HORNET SURVIVAL WEAPON

MODEL 294

PART & NO. BOLT ASSEM #141		SCALE 3:1	SPEC. NO. —
DESIGNED BY	DATE	DRAWING NO.	
DETAILED BY A.S.T.	DATE 9-9-50	C-294-141	
TRACED BY	DATE		
CHECKED BY	DATE 10/25/50		
APPVD. BY	DATE	SHEET 1 OF 1 SHEETS	

C'	CLASSIFICATION CANCELLED BY AUTHORITY OF OCM 33331	S.A	18 SEP 54
B	CHANGED, NOTE "A" & NOTE "B"	S.A	1-2-51
A	ADDED, ORDNANCE DRAWING NUMBERS & NOTE "A" & "B"	S.A	10-19-50
	REVISIONS	BY	DATE

FRACTIONAL DIMENSIONS ± .005 UNLESS SPECIFIED OTHERWISE

DO NOT SCALE THIS DRAWING

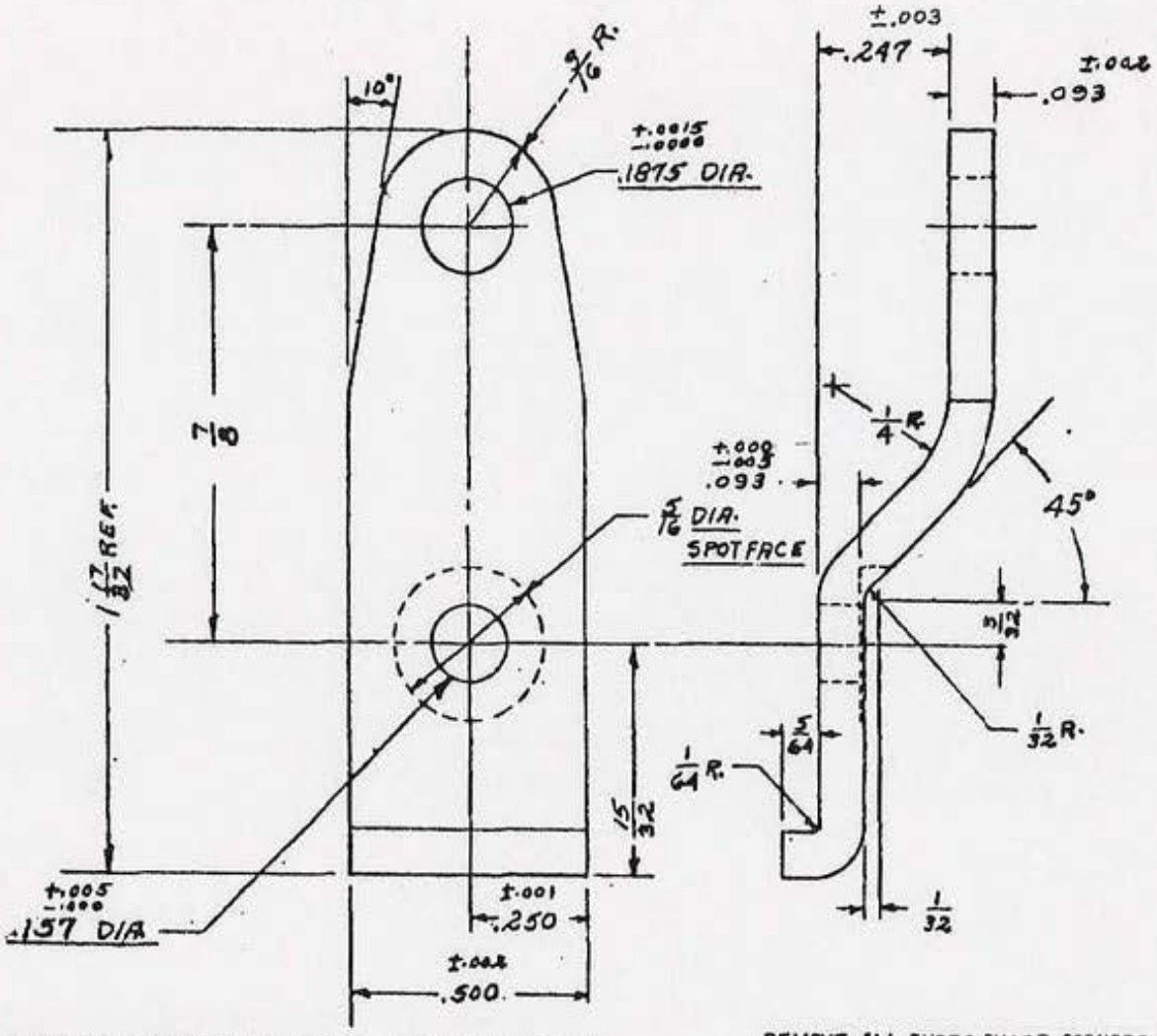

PROTECTIVE FINISH
TYPE II CLASS A
AT ASSEMBLY
7265773

ACTUAL SIZE

APPROVED PENDING
ORDNANCE DRAWING
LT. COL. F. J. McClelland
ORD. CORP
DATE OCT. 12, 1950

REMOVE ALL BURRS, SHARP CORNERS AND EDGES.

ORD. PART NO. 7265894

ITEM	NO. REQD.	MATERIAL	SIZE
89	1	A.I.S.I. 1010	.093 ±.002 STOCK

HARRINGTON & RICHARDSON ARMS CO.
WORCESTER, MASS.

SAFETY LEVER
"GAMESTER" 12 GA. BOLT ACTION SHOTGUN
MODEL 348

PART & NO. SAFETY LEVER "89		SCALE 4:1	OPER. NO. ~
DESIGNED BY	DATE	DRAWING NO.	
DETAILED BY	DATE Aug. 30-49	B-348-89	
TRACED BY	DATE		
CHECKED BY	DATE 8.30.49		
APPVD. BY	DATE	SHEET 1 OF 1 SHEETS	

	REVISIONS	BY	DATE
E	CLASSIFICATION CANCELLED BY AUTHORITY OF OCM 38331	S.A.	15 SEP 54
D	.157 DIA. ±.005/-.000 WAS .157 DIA. ±.005/-.000	S.A.	1-2-51
C	ADDED; PROT. FIN. & NOTE; REMOVED NOTE BLUED.	S.A.	10-13-50
B	1 25/64 WAS 1 27/64; 7/8 WAS 29/32		10-11-49
A	.247 WAS .278		10-3-49

FRACTIONAL DIMENSIONS ±. UNLESS SPECIFIED OTHERWISE

DO NOT SCALE THIS DRAWING

DEC 6 1951

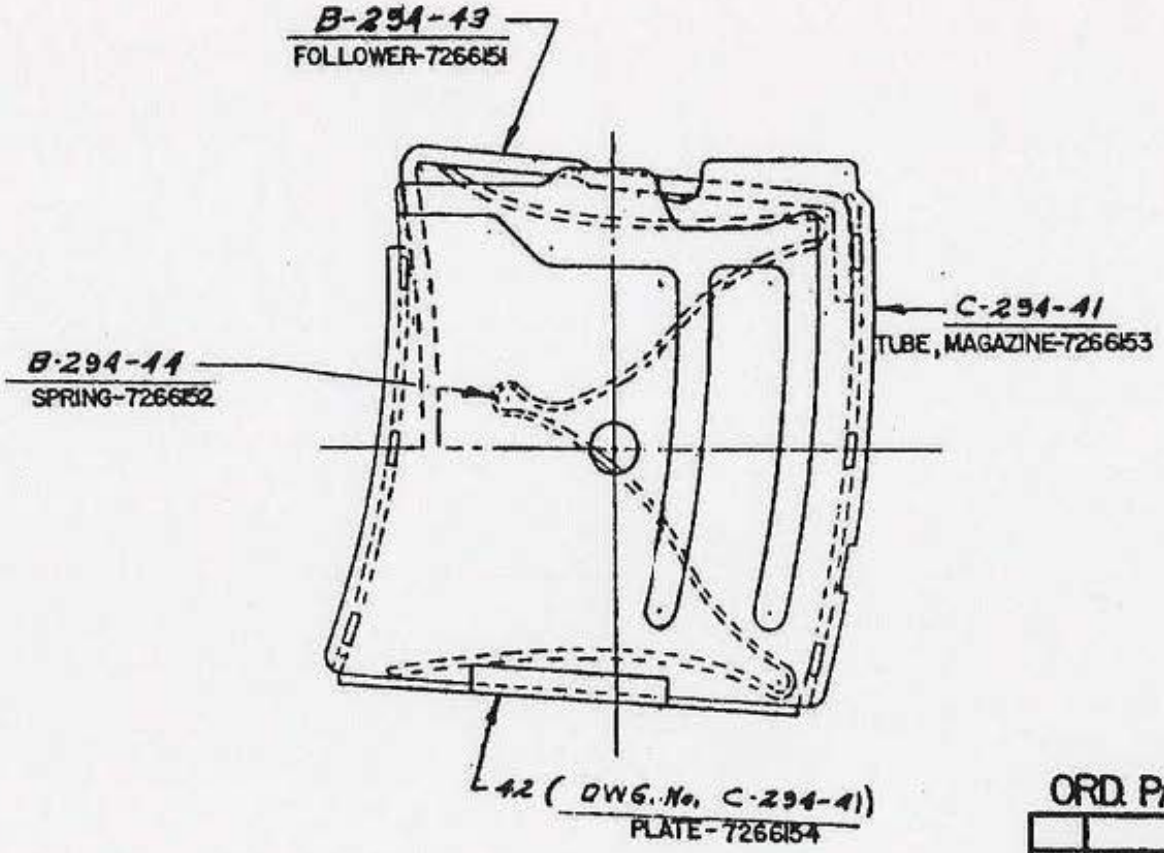

APPROVED PENDING ORDNANCE DRAWING
L.T. COL. ORD. CORPS
DATE JAN 7, 1952

ORD. PART NO. 7265895

ITEM	NO. REQD.	MATERIAL	SIZE

HARRINGTON & RICHARDSON ARMS CO.
WORCESTER, MASS.

MAGAZINE ASSEMBLY
.22 CAL. HORNET SURVIVAL WEAPON

MODEL 294

~~SUPERSEDES DWG. SAME No. DATED 11-5-51~~

D			
C			
B	ADDED; SUPERSEDES OLD DWG. W/O CHANGE	S.A.	1-7-52
	REVISIONS	BY	DATE

FRACTIONAL DIMENSIONS ± .005 UNLESS SPECIFIED OTHERWISE

PART & NO. REQ'D.	MAT'L. 61	SCALE 2:1	OPER. NO.
DRAWN BY	DATE	DRAWING NO.	
DETAILED BY	DATE MAY 28-51	B-294-61	
TRACED BY	DATE		
	12-17-51		

62

-V

DO NOT SCALE THIS DRAWING

PROTECTIVE FINISH
Ⓐ TYPE II CLASS A
U.S.A. 57-0-2

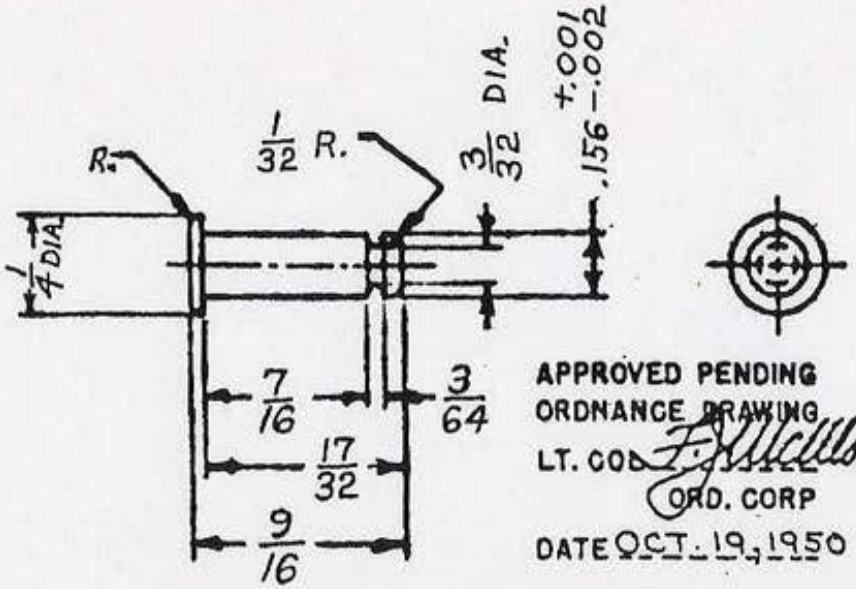

APPROVED PENDING
ORDNANCE DRAWING
LT. COL. F. J. McMorrow
ORD. CORP
DATE OCT. 19, 1950

ORD. PART NO. 7265896

CYANIDE HARDEN

29	1	A.I.S.I. - C1018 Ⓑ	
PIECE	NO. REQD.	MATERIAL	SIZE

HARRINGTON & RICHARDSON ARMS CO.
WORCESTER, MASS.

TRIGGER PIN
.22 CAL. HORNET SURVIVAL WEAPON
MODEL 294

PART & NO. Trigger Pin #29				SCALE 2/1	OPER. NO.
DESIGNED BY		DATE		DRAWING NO.	
DETAILED BY A.S.B.		DATE 7-10-50		A-294-29	
TRACED BY		DATE			
CHECKED BY		DATE 7/19/50			
APPR. BY		DATE		SHEET 1 OF 1 SHEETS	

	REVISIONS	BY	DATE
C	CLASSIFICATION CANCELLED BY AUTHORITY OF OCM 33331	S.A.	15 SEP 54
B	A.I.S.I.-C1018 WAS B-1113	S.A.	1-7-52
A	PROTECTIVE FINISH ADDED.	S.A.	10-13-50

FRACTIONAL DIMENSIONS ± .005 UNLESS SPECIFIED OTHERWISE

63

DO NOT SCALE THIS DRAWING

Ⓐ PROTECTIVE FINISH
TYPE II CLASS A
U.S.A. 57-0-2

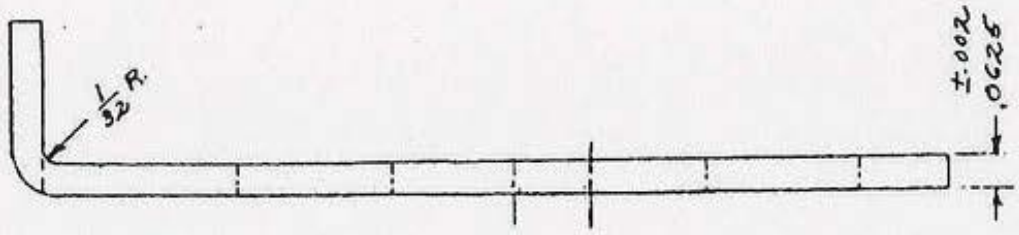

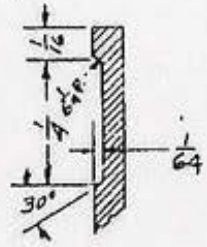

SECTION A-A

APPROVED PENDING
ORDNANCE DRAWING
LT. COL. F. J. McMorrow
ORD. CORP
DATE OCT. 19, 1950

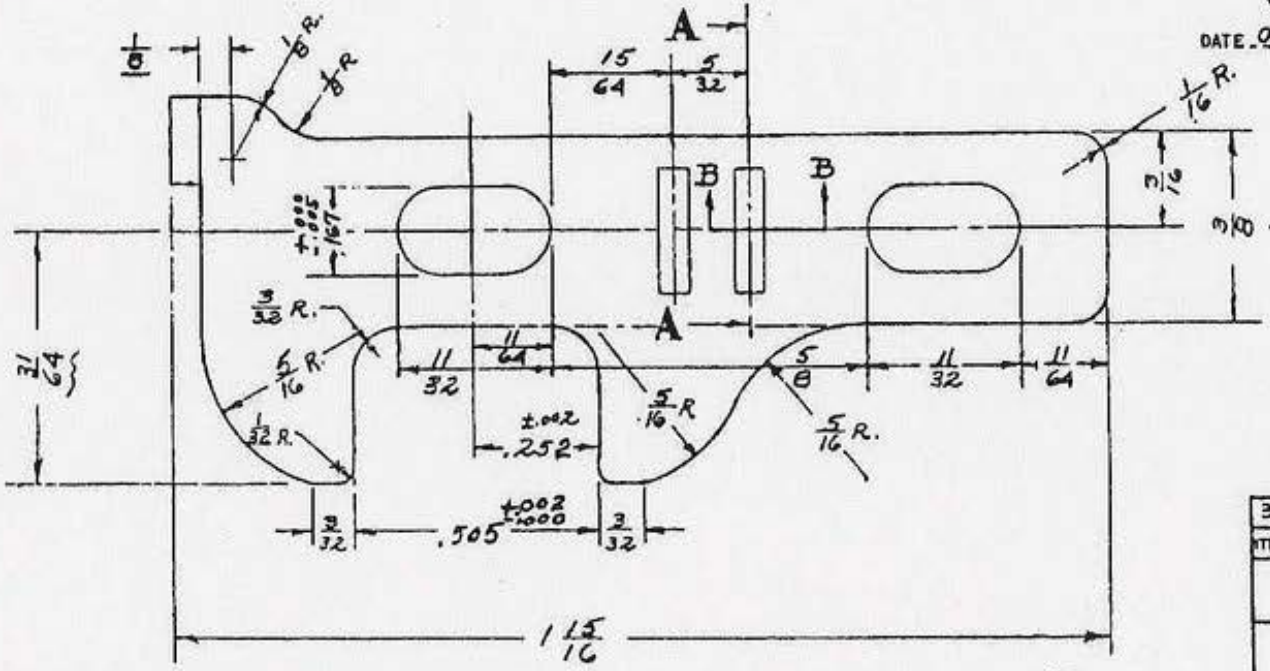

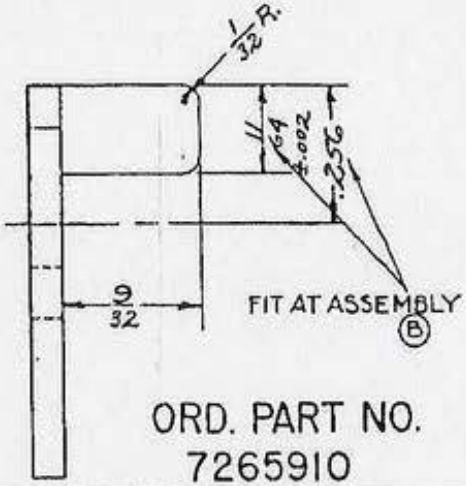

ORD. PART NO.
7265910

Ⓐ REMOVE ALL BURRS, SHARP CORNERS & EDGES.

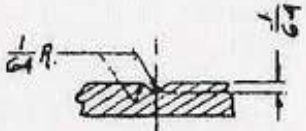

SECTION B-B

ITEM	NO. REQ'D.	MATERIAL	SIZE
30	1	AISI 1010	1/16 THICK

HARRINGTON & RICHARDSON ARMS CO.
WORCESTER, MASS.

SAFETY LEVER SLIDE

MODEL 865

PART & NO. SAFETY LEVER #32		SCALE 4:1	OPER. NO. ~
DESIGNED BY	DATE	DRAWING NO.	
DETAILED BY	DATE NOV. 11-48	B-865-32	
TRACED BY	DATE		
CHECKED BY	DATE DEC. 16-48		
APPVD. BY	DATE	SHEET 1 OF 1 SHEETS	

C	CLASSIFICATION CANCELLED BY AUTHORITY OF OCM 35551	S.A.	15SEP54
B	ADDED; NOTE, "FIT AT ASSEMBLY"	S.A.	1-2-51
A	PROTECTIVE FINISH ADDED; NOTE ADDED.	S.A.	10-13-50
	REVISIONS	BY	DATE

FRACTIONAL DIMENSIONS ± .005 UNLESS SPECIFIED OTHERWISE

64

DO NOT SCALE THIS DRAWING

(A) PROTECTIVE FINISH
TYPE II CLASS A
AT ASSEMBLY 7265893

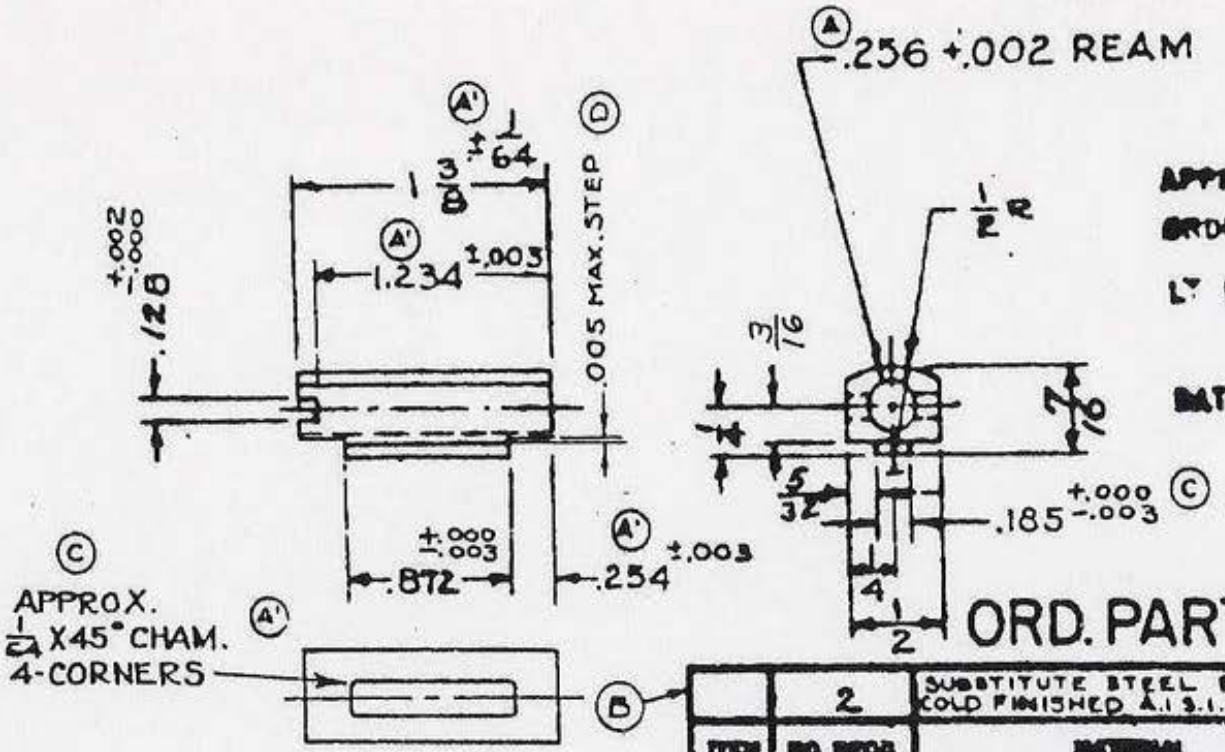

APPROVED PRODUCTION
ORDNANCE DRAWING
LT. COL. F. Williamson
ORD. CORP
DATE OCT. 19, 1950.

DUPLICATE

ORD. PART NO. 7265913

ITEM	NO. REQD.	MATERIAL	SIZE
	2	SUBSTITUTE STEEL B-1113 COLD FINISHED A.I.S.I. 1020	1/2 SQ.

HARRINGTON & RICHARDSON ARMS CO.
WORCESTER, MASS.

BRACE TUBE

.22 CAL. HORNET SURVIVAL WEAPON

MODEL 294

E'	CLASSIFICATION CANCELLED BY AUTHORITY OF OCM 33331	S.A.	15SEP54
	SUPERSEDES DWG SAME NO. DATED 2-8-50		
D	.005 MAX. STEP, ADDED.	S.A.	4-11-51.
C	NOTE ADDED: .185 +.000 -.003 WAS .187 +.000 -.003	S.A.	3-12-51
B	MAT. ADDED, COLD FINISHED A.I.S.I. 1020, SUBSTITUTE STEEL B-1113	S.A.	1-30-51
A	PROT. FINISH ADDED, .256 +.002 REAM WAS LETTER "F" (.257) DRILL	S.A.	10-13-50
	A' .256 DIA. REMOVED, 1/64 TOL. ADDED. REVISIONS LAST DATE & SYMBOL ADDED	BY	DATE

PART & NO. BRACE TUBE # 260	SCALE FULL
DESIGNED BY	DATE
DETAILED BY S.S.	DATE 7-28-50
TRACED BY	DATE
CHECKED BY F.C.B.	DATE 8-18-50
APPR. LT	DATE

DRAWING NO. 65
A 294-260
SHEET 1 OF 1 SHEETS

FRACTIONAL DIMENSIONS ± .005 UNLESS SPECIFIED OTHERWISE

A

DO NOT SCALE THIS DRAWING

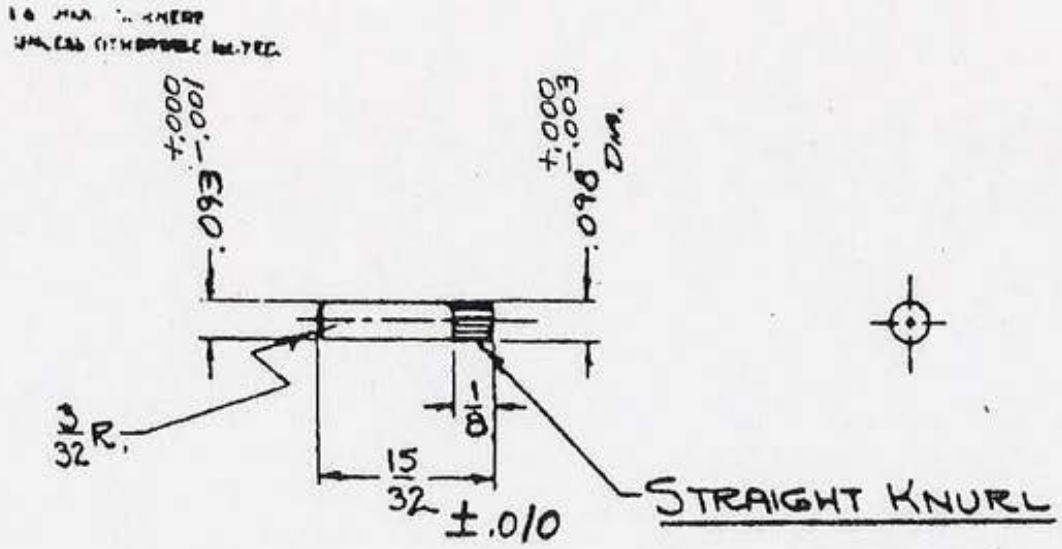

APPROVED PENDING
ORDNANCE DRAWING
COL. F. McCullough
ORD. CORP
DATE JAN. 29, 1951

CYANIDE HARDEN

PROT. FINISH
TYPE II CLASS A OR B
U.S.A. SPEC. 57-0-2

ORD. PART NO. 7265962

ITEM	NO. REQD.	MATERIAL	SIZE
		A.I.S.I. B-1113	.093 +.000 -.001 Dia.

HARRINGTON & RICHARDSON ARMS CO.
WORCESTER, MASS.

FRONT SIGHT RETAINING PIN

MODEL 294

PART & NO. FRONT SIGHT RET PIN 294		SCALE 2:1	OPER. NO.
DESIGNED BY	DATE	DRAWING NO. 66	
DETAILED BY A.S.B.	DATE 11-17-50	A-294-360	
TRACED BY	DATE		
CHECKED BY H.E.M.	DATE 1-5-51		
APPVD. BY	DATE	SHEET 1 OF 1 SHEETS	

	REVISIONS	BY	DATE
C			
B			
A			

FRACTIONAL DIMENSIONS ± .005 UNLESS SPECIFIED OTHERWISE

DO NOT SCALE THIS DRAWING

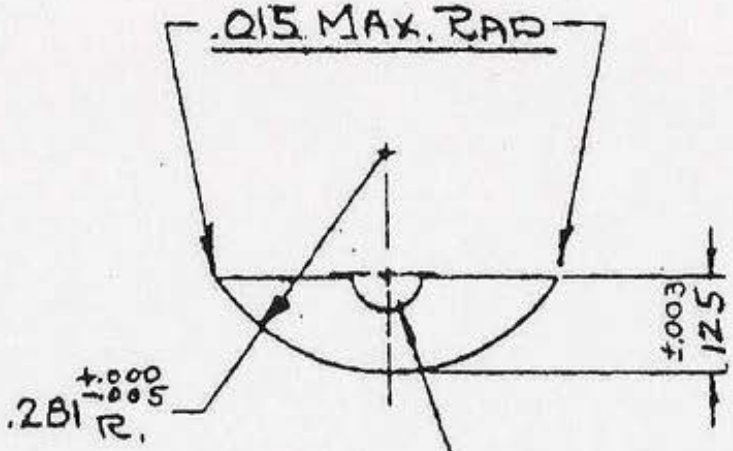

NOTE:- SHEARED EDGES MUST BE SMOOTH. CORNERS AND EDGES SHALL NOT BE ROUNDED TO EXCEED .010 RAD. UNLESS OTHERWISE SPECIFIED.

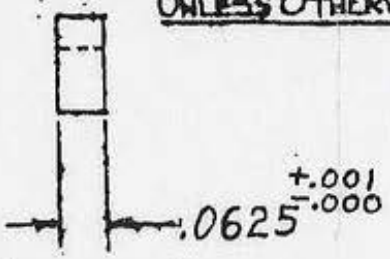

REAM AT ASSEMBLY WITH B294-48(7265964 AND C294-8(7265718)

APPROVED PENDING ORDNANCE DRAWING

COL. F. McMorrow ORD. CORP

DATE JAN. 29, 1951

ORD. PART NO. 7265963

ITEM	NO. REQD.	MATERIAL	SIZE
(A)		SUBSTITUTE AISI C-1010	
370	1	AISI C-1020	

HARRINGTON & RICHARDSON ARMS CO.
WORCESTER, MASS.

FRONT SIGHT KEY

MODEL 294

PROT. FINISH
TYPE II CLASS A OR B
U.S.A. SPEC. 57-0-2

PART & NO. FRONT SIGHT KEY #370		SCALE 4:1	OPER. NO. ~		
DESIGNED BY	DATE	DRAWING NO. 67			
DETAILED BY A.C.S.	DATE 1-2-51	A-294-370			
TRACED BY	DATE				
CHECKED BY H.E.M.	DATE 1-5-51				
APPVD. BY	DATE	SHEET 1 OF 1 SHEETS			

C			
B			
A	SUBSTITUTE MAT. ADDED	SA	1-7-52
	REVISIONS	BY	DATE

FRACTIONAL DIMENSIONS ± .005 UNLESS SPECIFIED OTHERWISE

DO NOT SCALE THIS DRAWING

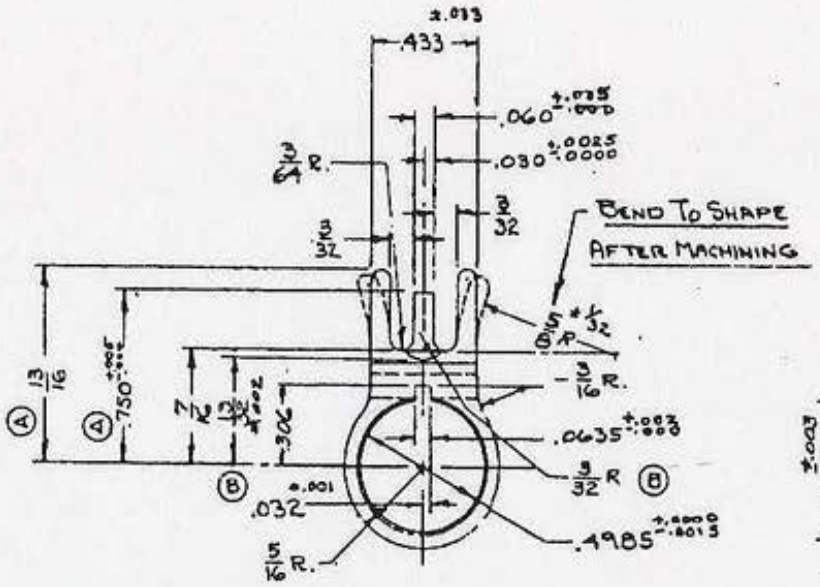

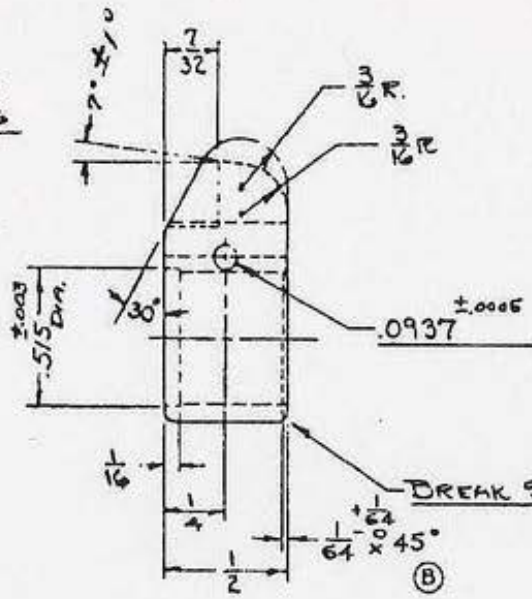

APPROVED PENDING
ORDNANCE DRAWING
COL. F. J. McMorrow
ORD. CORP
DATE JAN. 29, 1951

ORD. PART NO. 7265964

ITEM	NO. REQD.	MATERIAL	SIZE
48	1	AISI - C1018	

HARRINGTON & RICHARDSON ARMS CO.
WORCESTER, MASS.

FRONT SIGHT

MODEL 294

PROT. FINISH
TYPE II CLASS A
USA SPEC 57-0-2

PART & NO. FRONT SIGHT #48	SCALE 2:1	OPER. NO.
DESIGNED BY	DATE	DRAWING NO.
DETAILED BY A.S.B.	DATE 11-17-50	B-294-48
TRACED BY	DATE	
CHECKED BY H.E.M.	DATE 1-5-51	
APPVD. BY	DATE	SHEET 1 OF 1 SHEETS

C			
B	ADDED 1/64 x 45° (B) TRIM K 3-15-51, ADDED 1/8 R, 15/32-NO DATE PER HER PRINT, 3/32 R WAS 1/8 R (B) 10-23-51	S.A.	11-9-51
A	13/16 WAS 3/4 ; .750 +.005 / -.000 WAS .687 +.005 / -.000 (A.S.B. 3-5-51)	S.A.	3-22-51
	REVISIONS	BY	DATE

FRACTIONAL DIMENSIONS ±.010 UNLESS SPECIFIED OTHERWISE

THIS DWG. SUPERSEDES DWG. NO. A-294-48 DATED 3-20-50
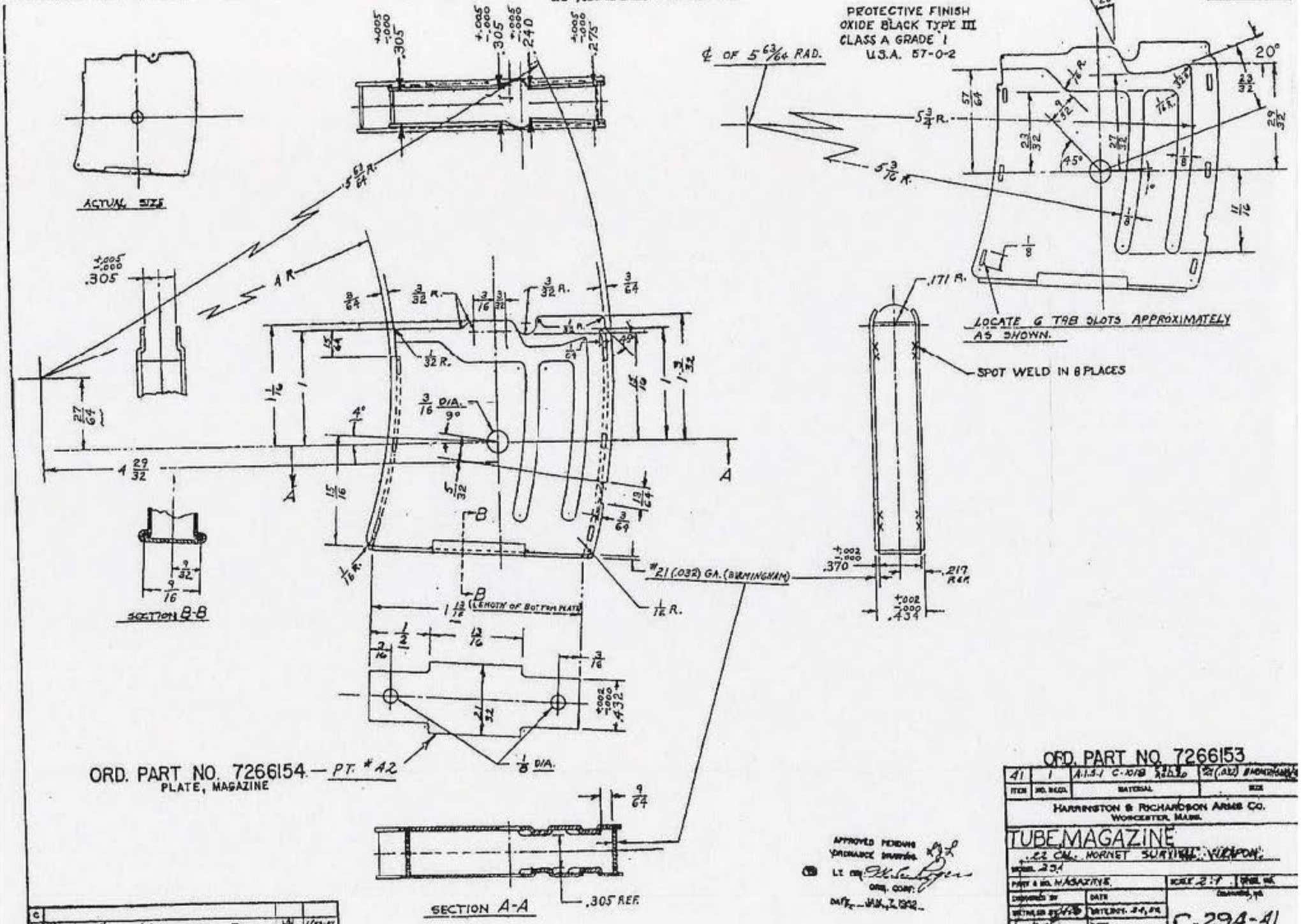
DO NOT SCALE THIS DRAWING